JUNTA DE SUBASTAS

Hon. Pedro R. Pierluisi Urrutia
Gobernador

Lcda. Karla G. Mercado Rivera
Administradora y Principal Oficial de Compras

NOTIFICACIÓN NÚM. 2

SUBASTA FORMAL 23J-00935
PARA REALIZAR MEJORAS DE CONSTRUCCIÓN PREVENTIVA Y DE MITIGACIÓN DE DAÑOS FUTUROS EN EL DEPARTAMENTO DE ESTADO DEL GOBIERNO DE PUERTO RICO

Asunto: PLANOS ADICIONALES

Se notifica a los licitadores interesados en participar en la subasta de referencia de la siguiente información:

I. **ENVÍO DE PLANOS ADICIONALES EN FORMATO PDF.** ***(VER ARCHIVO ADJUNTO).***

Esta Notificación forma parte del pliego de Subasta Formal y tendrá que ser considerada junto con su Oferta. Todos los demás términos, condiciones y especificaciones permanecen sin alterar.

Edmarie Avilés Almenas
Secretaria
Junta de Subastas

JUNTA DE SUBASTAS ASG GOBIERNO DE PUERTO RICO

Emitida hoy, 6 de septiembre de 2022
San Juan, Puerto Rico

Administración de Servicios Generales
Gobierno De Puerto Rico
PO Box 41249 San Juan, PR 00940 | (787) 759-7676
juntadesubastas@ asg.pr.gov

INDEX OF DRAWINGS:

GENERAL

T-1.0 TITLE SHEET

EXISTING CONDITIONS

D-1.1 EXISTING FIRST LEVEL FLOOR PLAN (FOR REFERENCE ONLY)

D-1.2 EXISTING SECOND LEVEL FLOOR PLAN (FOR REFERENCE ONLY)

D-1.3 EXISTING THIRD LEVEL FLOOR PLAN (FOR REFERENCE ONLY)

D-1.3a EXISTING FOURTH LEVEL FLOOR PLAN (FOR REFERENCE ONLY)

D-1.4 EXISTING & DEMOLITION ROOF LEVEL PLAN

PROPOSED

A-1.1 PROPOSED ROOF LEVEL PLAN

A-1.2 STEEL STANDS & A/C EQUIPMENT ANCHORAGE DETAILS

A-2.0a EXISTING WINDOWS & LOCKING HARDWARE & PROPOSED LOCKING HARDWARE

A-2.0b EXISTING DOORS & LOCKING HARDWARE & PROPOSED LOCKING HARDWARE

A-2.1 EXISTING WINDOWS ELEVATIONS W/ PROPOSED LOCKING HARDWARE

A-2.2 EXISTING WINDOWS ELEVATIONS W/ PROPOSED LOCKING HARDWARE

A-2.3 EXISTING WINDOWS ELEVATIONS W/ PROPOSED LOCKING HARDWARE

A-2.4 EXISTING DOORS ELEVATIONS W/ PROPOSED LOCKING HARDWARE

A-2.5 EXISTING DOORS ELEVATIONS W/ PROPOSED LOCKING HARDWARE

A-2.6 EXISTING DOORS ELEVATIONS W/ PROPOSED LOCKING HARDWARE

A-2.7 EXISTING DOORS ELEVATIONS W/ PROPOSED LOCKING HARDWARE

A-2.8 EXISTING DOORS ELEVATIONS W/ PROPOSED LOCKING HARDWARE

A-2.9 EXISTING DOORS ELEVATIONS W/ PROPOSED LOCKING HARDWARE

A-2.10 WINDOWS & DOORS WEATHERSTRIPS & LOCKING DEVICES DETAILS

A-2.11 WINDOWS & DOORS WEATHERSTRIPS & LOCKING DEVICES DETAILS

A-2.12 WINDOWS & DOORS LOCKING DEVICES DETAILS

LOCATION MAP
NOT TO SCALE

ZONING MAP
NOT TO SCALE

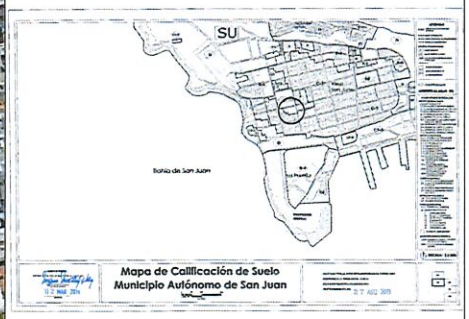

FEMA FLOOD MAP
NOT TO SCALE

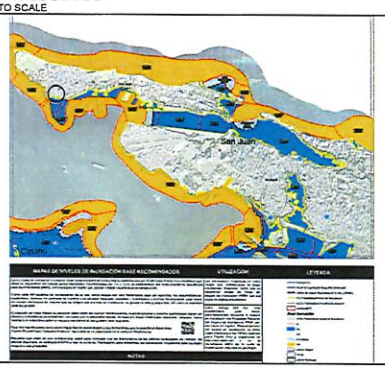

HAZARD MITIGATION FOR STATE DEPARMENT BUILDING

CONSTRUCTION DRAWINGS

ENGINEERED ADVANTAGE, PSC
Ave. Ponce de León # 404 Suite 506
San Juan, Puerto Rico 00901
p. 787-766-6032 email.pjvagnetti@eapsc.net

PROJECT
CONSTRUCTION FOR
HAZARD MITIGATION FOR STATE DEPARTMENT BUILDING

ADDRESS
SAN JOSE STREET
SAN JUAN, PUERTO RICO

OWNER:

SEAL:

DRAWN BY:	D. LUGO
REVIEWED BY:	P. J. VAGNETTI
DATE:	2021-09-09
PROJECT NO:	20-720

NO.	REVISION	DATE

SHEET TITLE:

TITLE SHEET

PAGE NUMBER

T-1.0

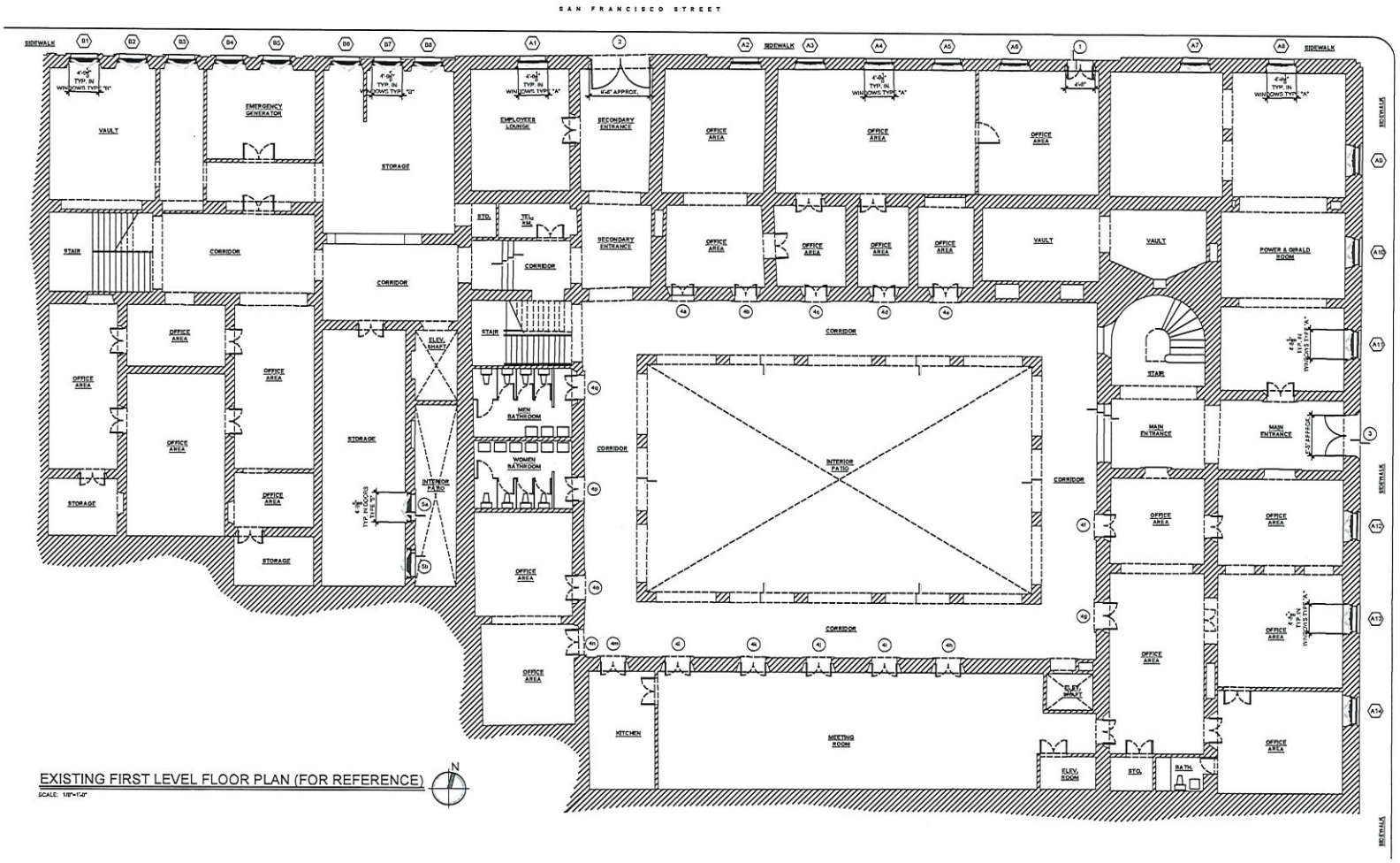

EXISTING FIRST LEVEL FLOOR PLAN (FOR REFERENCE)

SCALE: 1/8"=1'-0"

N

LEGEND

- EXISTING WALL OR COLUMN
- CHANGE IN LEVEL
- (X) DOOR IDENTIFICATION MARK
- (X) WINDOW IDENTIFICATION MARK
- DOOR SYMBOL

IMPORTANT NOTES ABOUT THIS PROJECT

1. ALL WINDOWS AND DOORS DIMENSIONS IN ELEVATIONS AND SECTIONS ARE FOR REFERENCE. CONTRACTOR SHALL VERIFY EACH WINDOWS AND DOORS DIMENSIONS INCLUDING MOLDINGS, FRAMES AND DOOR LEAVES IN ORDER TO COORDINATE THE PROPER INSTALLATION OF THE PROPOSED LOCKING HARDWARE AND WEATHERSTRIP COMPONENTS.

2. CONTRACTOR SHALL SUPPLY SHOP DRAWINGS FOR THE INSTALLATION OF EACH LOCKING HARDWARE AND WEATHER STRIP COMPONENTS.

3. WINDOWS AND DOORS SHALL BE REPAIRED (IF NEEDED) AND FINISHED IN ORDER TO MAINTAIN THE PROPER OPERATION OF LOCKING HARDWARE (EXISTING & PROPOSED), PROPER OPERATION OF THE WEATHERSTRIP MATERIAL AND GOOD AESTHETIC AFTER THE INSTALLATION OF LOCKING HARDWARE AND WEATHERSTRIP MATERIAL.

4. PAINT OF WINDOWS AND DOORS THAT HAVE TO BE PAINTED (AS NEEDED) WILL BE SELECTED BY ARCHITECT / ENGINEER.

5. EXISTING FLOOR PLANS ARE FOR REFERENCE ONLY AND FOR THE PROPER IDENTIFICATION AND LOCATION OF EACH DOOR AND WINDOW.

ENGINEERED ADVANTAGE, PSC
P.O. BOX 6025
San Juan, Puerto Rico 00914
p. 787-756-6032 email.pjvagnetti@eapsc.net

PROJECT
CONSTRUCTION FOR
HAZARD MITIGATION FOR STATE DEPARTMENT BUILDING

ADDRESS
SAN JOSE STREET
SAN JUAN, PUERTO RICO

OWNER:

SEAL:

DRAWN BY:	D. LUGO
REVIEWED BY:	P. J. VAGNETTI
DATE:	2021-09-09
PROJECT NO.	20-720

NO.	REVISION	DATE

SHEET TITLE:

EXISTING FIRST LEVEL FLOOR PLAN (FOR REFERENCE ONLY)

PAGE NUMBER

D-1.1

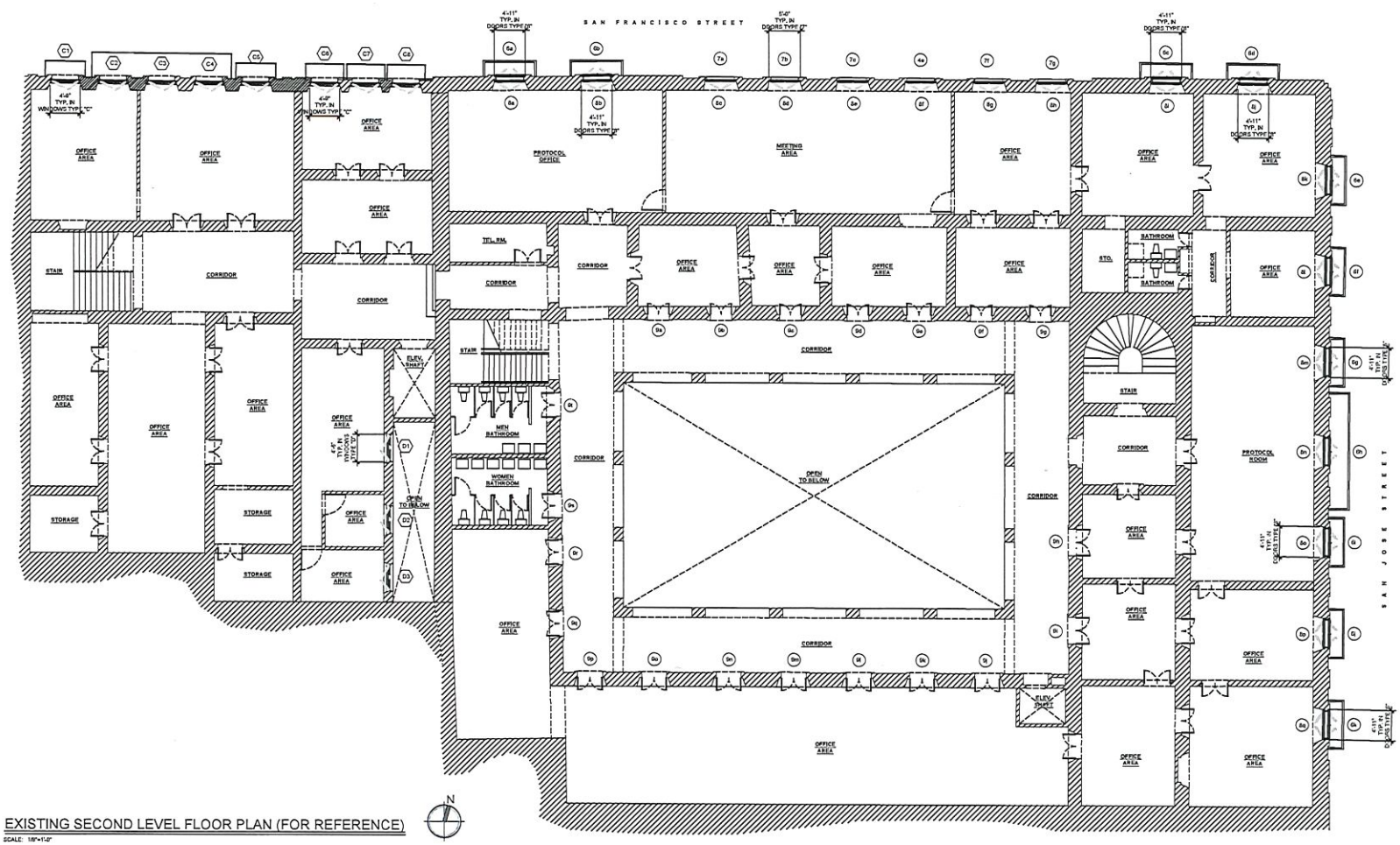

EXISTING SECOND LEVEL FLOOR PLAN (FOR REFERENCE)

SCALE: 1/8"=1'-0"

LEGEND

- EXISTING WALL OR COLUMN
- CHANGE IN LEVEL
- (X) DOOR IDENTIFICATION MARK
- (X) WINDOW IDENTIFICATION MARK
- DOOR SYMBOL

IMPORTANT NOTES ABOUT THIS PROJECT

1. ALL WINDOWS AND DOORS DIMENSIONS IN ELEVATIONS AND SECTIONS ARE FOR REFERENCE. CONTRACTOR SHALL VERIFY EACH WINDOWS AND DOORS DIMENSIONS INCLUDING MOLDINGS, FRAMES AND DOOR LEAVES IN ORDER TO COORDINATE THE PROPER INSTALLATION OF THE PROPOSED LOCKING HARDWARE AND WEATHERSTRIP COMPONENTS.

2. CONTRACTOR SHALL SUPPLY SHOP DRAWINGS FOR THE INSTALLATION OF EACH LOCKING HARDWARE AND WEATHER STRIP COMPONENTS.

3. WINDOWS AND DOORS SHALL BE REPAIRED (IF NEEDED) AND FINISHED IN ORDER TO MAINTAIN THE PROPER OPERATION OF LOCKING HARDWARE (EXISTING & PROPOSED), PROPER OPERATION OF THE WEATHERSTRIP MATERIAL AND GOOD AESTHETIC AFTER THE INSTALLATION OF LOCKING HARDWARE AND WEATHERSTRIP MATERIAL.

4. PAINT OF WINDOWS AND DOORS THAT HAVE TO BE PAINTED (AS NEEDED) WILL BE SELECTED BY ARCHITECT / ENGINEER.

5. EXISTING FLOOR PLANS ARE FOR REFERENCE ONLY AND FOR THE PROPER IDENTIFICATION AND LOCATION OF EACH DOOR AND WINDOW.

ENGINEERED ADVANTAGE, PSC
P.O. BOX 6025
San Juan, Puerto Rico 00914
p. 787-756-6032 email:pjvagnetti@eapsc.net

PROJECT: CONSTRUCTION FOR
HAZARD MITIGATION FOR STATE DEPARTMENT BUILDING

ADDRESS: SAN JOSE STREET
SAN JUAN, PUERTO RICO

OWNER:

SEAL:

DRAWN BY:	D. LUGO
REVIEWED:	P. J. VAGNETTI
DATE:	2021-09-09
PROJECT NO:	20-720

NO.	REVISION	DATE.

SHEET TITLE:

EXISTING SECOND LEVEL FLOOR PLAN (FOR REFERENCE ONLY)

PAGE NUMBER

D-1.2

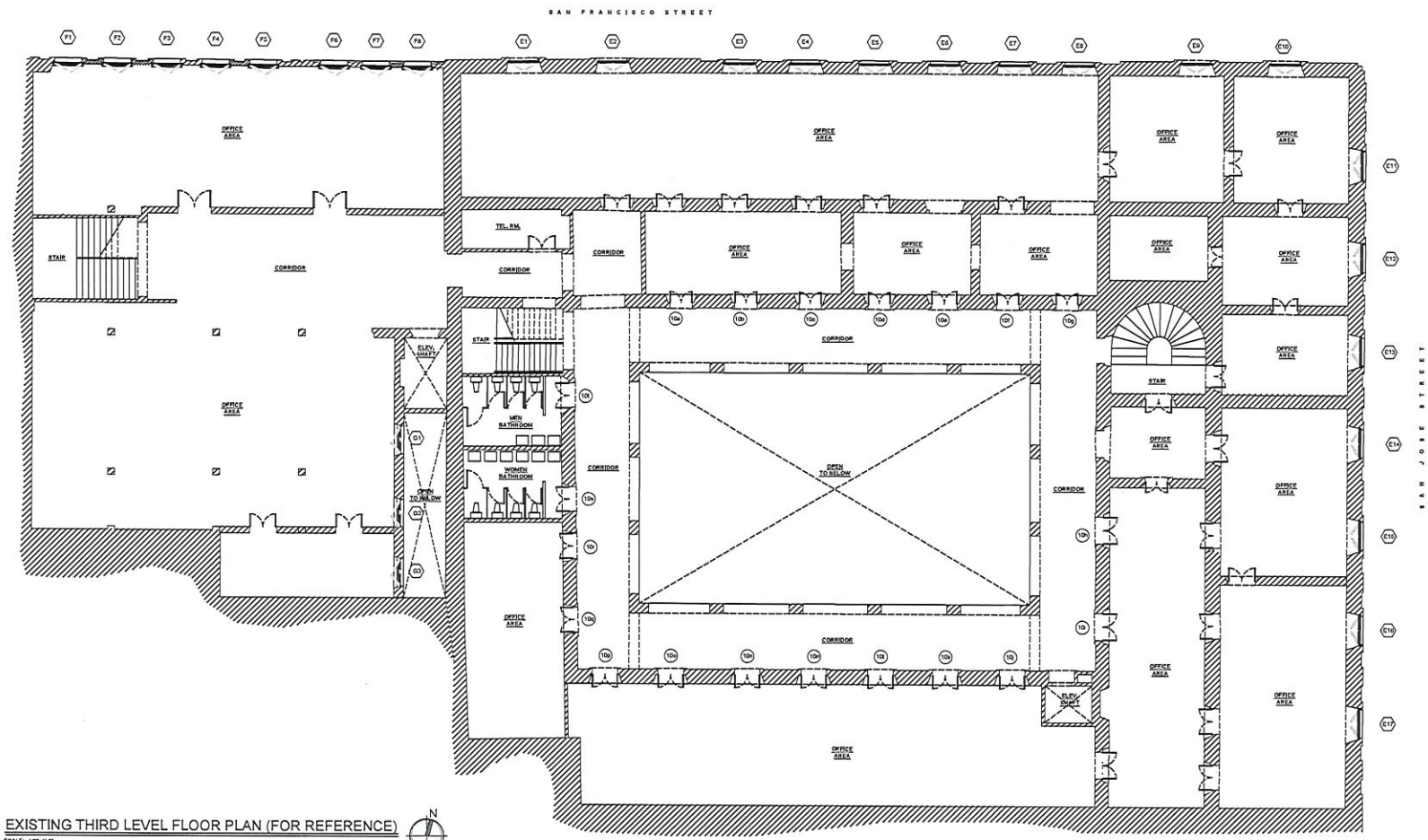

EXISTING THIRD LEVEL FLOOR PLAN (FOR REFERENCE)

SCALE: 1/8"=1'-0"

LEGEND

- EXISTING WALL OR COLUMN
- CHANGE IN LEVEL
- DOOR IDENTIFICATION MARK
- WINDOW IDENTIFICATION MARK
- DOOR SYMBOL

IMPORTANT NOTES ABOUT THIS PROJECT

1. ALL WINDOWS AND DOORS DIMENSIONS IN ELEVATIONS AND SECTIONS ARE FOR REFERENCE. CONTRACTOR SHALL VERIFY EACH WINDOWS AND DOORS DIMENSIONS INCLUDING MOLDINGS, FRAMES AND DOOR LEAVES IN ORDER TO COORDINATE THE PROPER INSTALLATION OF THE PROPOSED LOCKING HARDWARE AND WEATHERSTRIP COMPONENTS.

2. CONTRACTOR SHALL SUPPLY SHOP DRAWINGS FOR THE INSTALLATION OF EACH LOCKING HARDWARE AND WEATHER STRIP COMPONENTS.

3. WINDOWS AND DOORS SHALL BE REPAIRED (IF NEEDED) AND FINISHED IN ORDER TO MAINTAIN THE PROPER OPERATION OF LOCKING HARDWARE (EXISTING & PROPOSED), PROPER OPERATION OF THE WEATHERSTRIP MATERIAL AND GOOD AESTHETIC AFTER THE INSTALLATION OF LOCKING HARDWARE AND WEATHERSTRIP MATERIAL.

4. PAINT OF WINDOWS AND DOORS THAT HAVE TO BE PAINTED (AS NEEDED) WILL BE SELECTED BY ARCHITECT / ENGINEER.

5. EXISTING FLOOR PLANS ARE FOR REFERENCE ONLY AND FOR THE PROPER IDENTIFICATION AND LOCATION OF EACH DOOR AND WINDOW.

ENGINEERED ADVANTAGE, PSC
P.O. BOX 6025
San Juan, Puerto Rico 00914
p. 787-756-6032 email.pjvagnetti@eapsc.net

PROJECT
CONSTRUCTION FOR
HAZARD MITIGATION FOR STATE DEPARTMENT BUILDING

ADDRESS
SAN JOSE STREET
SAN JUAN, PUERTO RICO

OWNER:

SEAL:

DRAWN BY:	D. LUGO
REVIEWED BY:	P. J. VAGNETTI
DATE:	2021-06-09
PROJECT NO.	20-720

NO.	REVISION	DATE

SHEET TITLE:

EXISTINGTHIRD LEVEL FLOOR PLAN (FOR REFERENCE ONLY)

PAGE NUMBER

D-1.3

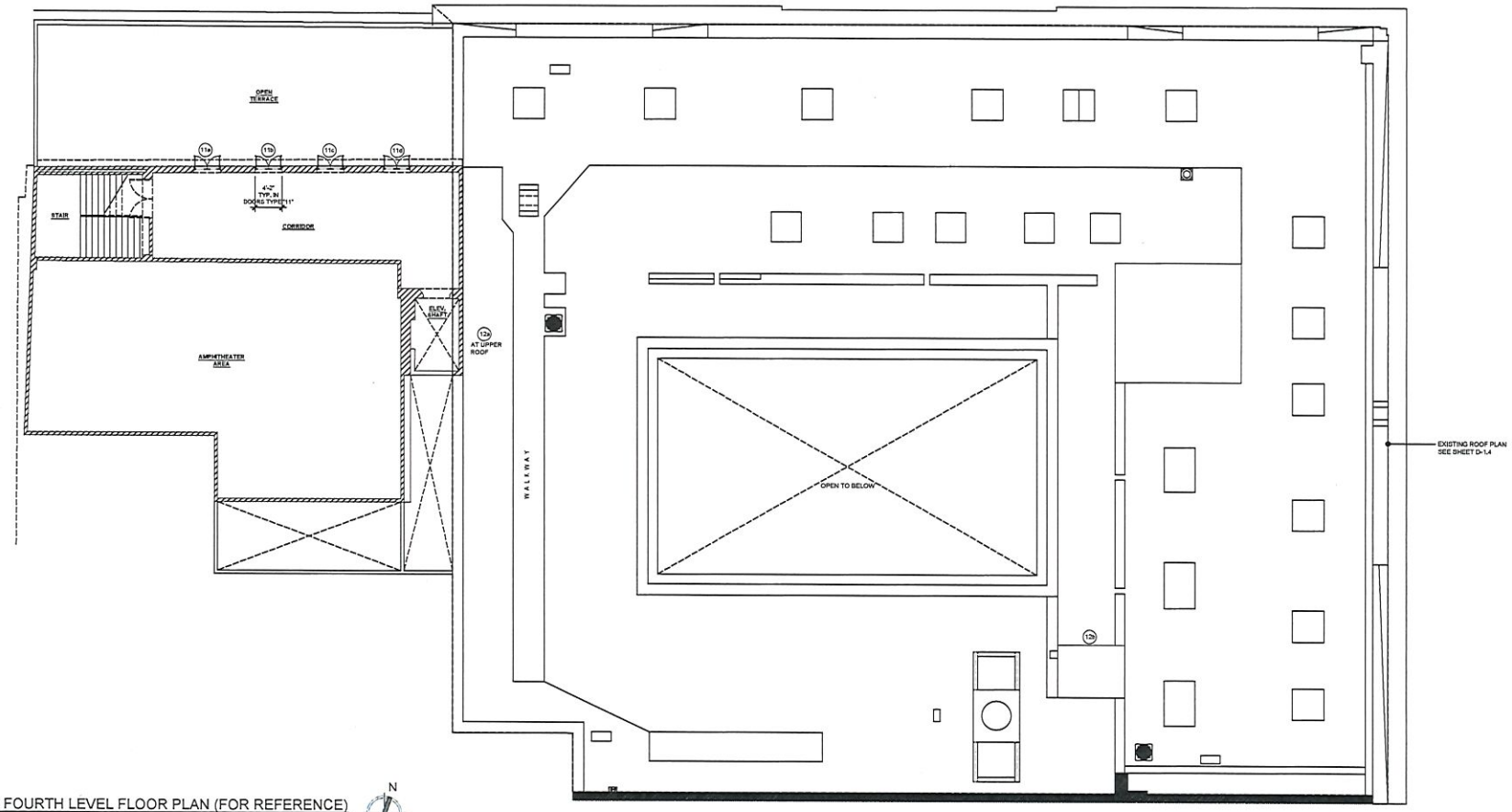

EXISTING FOURTH LEVEL FLOOR PLAN (FOR REFERENCE)

SCALE: 1/8" = 1'-0"

N

LEGEND

- EXISTING WALL OR COLUMN
- CHANGE IN LEVEL
- DOOR IDENTIFICATION MARK
- WINDOW IDENTIFICATION MARK
- DOOR SYMBOL

IMPORTANT NOTES ABOUT THIS PROJECT

1. ALL WINDOWS AND DOORS DIMENSIONS IN ELEVATIONS AND SECTIONS ARE FOR REFERENCE, CONTRACTOR SHALL VERIFY EACH WINDOWS AND DOORS DIMENSIONS INCLUDING MOLDINGS, FRAMES AND DOOR LEAVES IN ORDER TO COORDINATE THE PROPER INSTALLATION OF THE PROPOSED LOCKING HARDWARE AND WEATHERSTRIP COMPONENTS.

2. CONTRACTOR SHALL SUPPLY SHOP DRAWINGS FOR THE INSTALLATION OF EACH LOCKING HARDWARE AND WEATHER STRIP COMPONENTS.

3. WINDOWS AND DOORS SHALL BE REPAIRED (IF NEEDED) AND FINISHED IN ORDER TO MAINTAIN THE PROPER OPERATION OF LOCKING HARDWARE (EXISTING & PROPOSED), PROPER OPERATION OF THE WEATHERSTRIP MATERIAL AND GOOD AESTHETIC AFTER THE INSTALLATION OF LOCKING HARDWARE AND WEATHERSTRIP MATERIAL.

4. PAINT OF WINDOWS AND DOORS THAT HAVE TO BE PAINTED (AS NEEDED) WILL BE SELECTED BY ARCHITECT / ENGINEER.

5. EXISTING FLOOR PLANS ARE FOR REFERENCE ONLY AND FOR THE PROPER IDENTIFICATION AND LOCATION OF EACH DOOR AND WINDOW.

ENGINEERED ADVANTAGE, PSC
P.O. BOX 6025
San Juan, Puerto Rico 00914
p. 787-756-6032 email.pvagnetti@eapsc.net

PROJECT
CONSTRUCTION FOR
HAZARD MITIGATION FOR STATE DEPARTMENT BUILDING

ADDRESS
SAN JOSE STREET
SAN JUAN, PUERTO RICO

OWNER:

SEAL:

DRAWN BY:	D. LUGO
REVIEWED BY:	P. J. VAGNETTI
DATE:	2021-09-09
PROJECT NO:	21-720

NO.	REVISION	DATE

SHEET TITLE:

EXISTING FOURTH LEVEL FLOOR PLAN (FOR REFERENCE ONLY)

PAGE NUMBER

D-1.3a

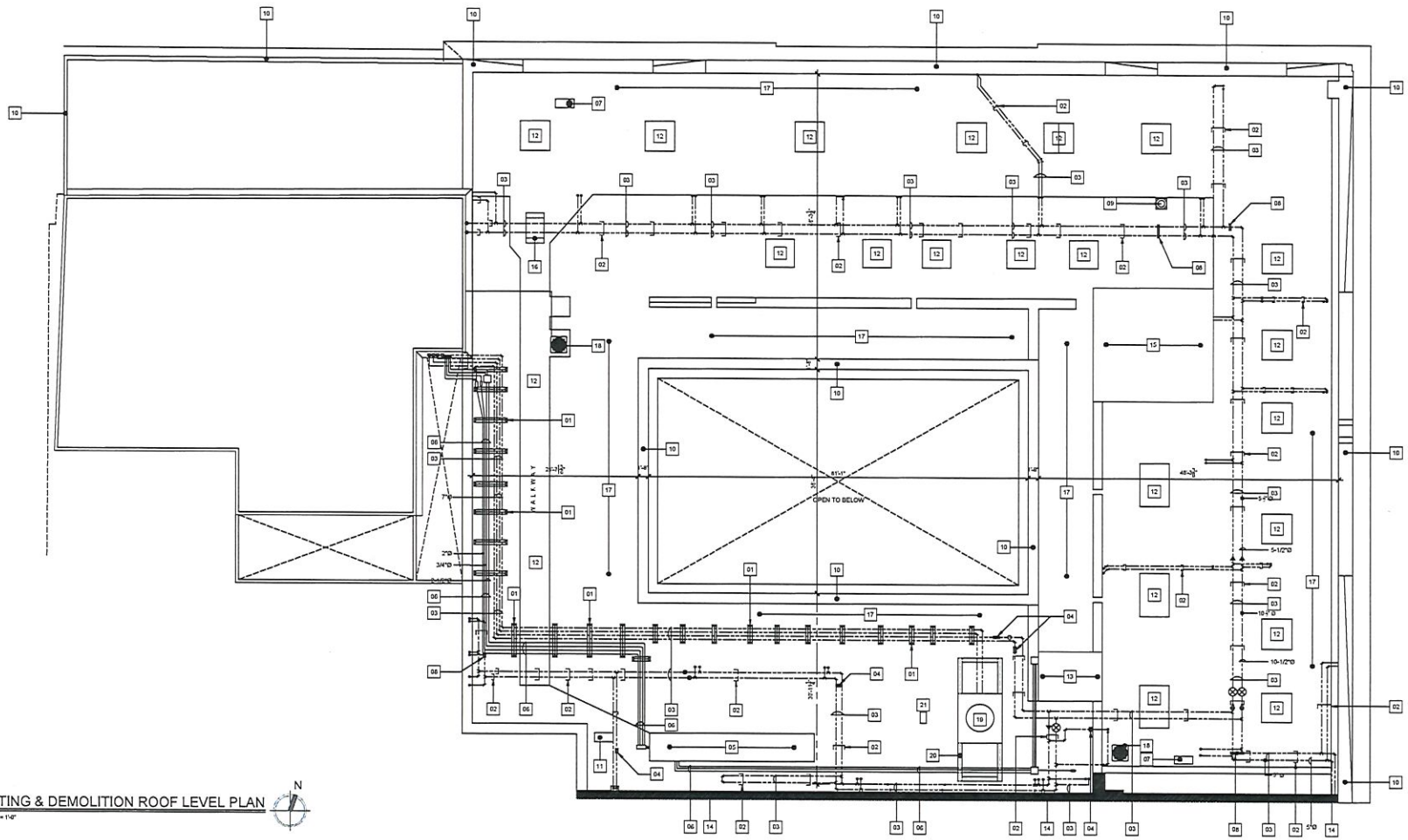

EXISTING & DEMOLITION ROOF LEVEL PLAN

SCALE: 1/8" = 1'-0"

N

EXISTING & DEMOLITION KEY NOTES:

01 EXITING "WHEEL STOP" WITH UNISTRUT TO ME REMOVED (TYPICAL).
02 EXISTING HEAVY CORRODED STEEL STAND TO BE REMOVED (TYPICAL).
03 EXISTING A/C WATER PIPES TO REMAIN (TYPICAL).
04 EXISTING CONC. BLOCK TEMPORARY STAND TO BE REMOVED (TYPICAL).
05 EXISTING ELECTRICAL SUBSTATION TO REMAIN.
06 EXISTING ELECTRICAL CONDUITS TO REMAIN (TYPICAL).
07 EXISTING A/C EQUIPMENT TO REMAIN.
08 EXISTING TEMPORARY WOOD STAND TO BE REMOVED.
09 EXISTING EXHAUST TO REMAIN.
10 EXISTING MASONRY PARAPET TO REMAIN.
11 EXISTING ELECTRICAL EQUIPMENT TO REMAIN.
12 EXISTING FLOOR PAD TO REMAIN.
13 EXISTING MECH. ROOM TO REMAIN.
14 EXISTING MASONRY WALL TO REMAIN.
15 EXISTING STAIR ROOF TO REMAIN.
16 EXISTING STEPS TO REMAIN.
17 EXISTING ROOFING MATERIAL. CONTRACTOR SHALL COORDINATE W/ OWNER AND/OR ROOF CONTRACTOR TO COORDINATE ANY PERFORATION TO EXISTING ROOFING MATERIAL IN ORDER TO MAINTAIN THE ROOFING WORKS WARRANTY IF ANY. SEE NOTES #1 & #2 ON THIS SHEET.
18 EXISTING CONDENSING UNITS TO BE PROPERLY ANCHORED.
19 EXISTING A/C COOLING TOWER TO BE PROPERLY ANCHORED.
20 EXISTING A/C COOLING TOWER STEEL BASE TO BE CLEANED AND PAINTED. SEE NOTE #3 ON THIS SHEET.
21 EXISTING A/C COOLING TOWER ELECTRICAL PANEL TO BE RELOCATED.

LEGEND

- EXISTING HEAVY CORRODED STEEL STAND FOR A/C & ELECTRICAL PIPES TO BE REMOVED (TYPICAL)
- EXISTING TEMPORARY BLOCK STAND TO BE REMOVED
- EXISTING TEMPORARY WOOD STAND TO BE REMOVED
- EXISTING WHEELSTOPS WITH UNISTRUT TO BE REMOVED
- EXISTING A/C PIPES TO REMAIN.
- EXISTING ELECTRICAL CONDUITS TO REMAIN.

IMPORTANT NOTES ABOUT THE ROOF WORKS IN THIS PROJECT

1. CONTRACTOR SHALL COORDINATE WITH OWNER AND / OR ROOFING CONTRACTOR THAT INSTALLED THE EXISTING ROOF IMPERMEABILIZATION SYSTEM IN ORDER TO MAINTAIN THE EXISTING WARRANTY OF THE ROOFING WORKS IF ANY.
2. CONTRACTOR SHALL CONSIDER THE FOLLOWING ITEMS:
   - ANY ASBESTOS AND LEAD REPORT BEFORE REMOTION OF EXISTING ROOF IMPERMEABILIZATION SYSTEM.
3. CONTRACTOR SHALL COORDINATE WITH PAINT PROVIDER FOR THE STEEL STANDS AND/ OR BASE IN ORDER TO PROPERLY CLEAN, COVER AND PROTECT THE STEEL ELEMENTS OF CORROSION.
4. THE CONTRACTOR MUST VISIT THE PROJECT TO GET FAMILIAR WITH THE EXISTING CONDITIONS AND UNDERSTAND THE SCOPE OF THE ENTIRE ROOF WORKS TO BE COMPLETED.
5. CONTRACTOR MUST EXERCISE GREAT CARE WHEN REMOVING, DISMANTLING OR DEMOLISHING ALL REQUIRED PARTS OF THE EXISTING CONDITION IN ORDER NOT TO DAMAGE OTHER EXISTING BUILDING COMPONENTS WHICH ARE TO REMAIN UNALTERED IN THE NEW PROJECT. THIS MAY INCLUDE THE PROVISION OF PROTECTIVE MEASUREMENTS AND COVERING OVER SOME DELICATE BUILDING COMPONENTS DURING SOME PERIODS OF THE WORK.
6. ALL DEBRIS RESULTING FROM THE DEMOLITION WORKS / CONSTRUCTION WORKS MUST BE PILED WITHIN THE PROJECT PREMISES ENSURING IT DOES NOT INTERFERE WITH THE ADEQUATE USE OF THE BUILDING, NOR AFFECTS IN ANY WAY THE NEIGHBORS AND PUBLIC SPACE. ALL PILED-UP DEBRIS MUST BE REMOVED FROM SITE NO LATER THAN EVERY FIVE DAYS.
7. CONTRACTOR WILL PAY ATTENTION TO ALL CONTROL MEASUREMENT IN ORDER TO ENSURE THE BEST POSSIBLE ENVIRONMENTAL QUALITY FOR ALL NEIGHBORING BUILDINGS AND PUBLIC SPACE. ATTENUATION MEASUREMENTS FOR NOISE, DUST AND ODORS CONTROL MUST BE TAKEN INTO CONSIDERATION DURING BOTH DEMOLITION AND CONSTRUCTION WORK.
8. ALL EQUIPMENT, MATERIALS AND/OR ACCESSORIES TO BE REMOVED AND/OR RELOCATED BY THE CONTRACTOR SHALL BE PROPERLY PROTECTED. CONTRACTOR SHALL COORDINATE WITH OWNER THE LOCATION FOR THE PROPER STORAGE OF THE EQUIPMENT, MATERIALS AND/OR ACCESSORIES.
9. CONTRACTOR SHALL VERIFY ALL DIMENSIONS AND EXISTING CONDITIONS AT THE FIELD PRIOR TO START ANY WORK. THE CONTRACTOR SHALL NOTIFY IN WRITING TO THE ARCHITECT AND/OR ENGINEER OF ANY DISCREPANCIES BETWEEN EXISTING CONDITIONS AND CONTRACT DOCUMENTS.
10. CONTRACTOR SHALL HAVE STUDIED THE EXISTING CONDITIONS AND THE EXISTING & DEMOLITION DRAWINGS PRIOR TO A CONSTRUCTION AGREEMENT WITH OWNER, SO THAT CONTRACTOR SHALL INCLUDE ALL DEMOLITION WORK AND REMOVAL OF DEBRIS.
11. DEMOLITION WORKS NOT SPECIFIED IN DRAWINGS BUT REQUIRED TO COMPLETE THE WORK ARE BOUND BY THE TERMS OF CONSTRUCTION CONTRACT.

ENGINEERED ADVANTAGE, PSC
P.O. BOX 6025
San Juan, Puerto Rico 00914
p. 787-756-6032 email.pjvagnetti@eapsc.net

PROJECT
CONSTRUCTION FOR
HAZARD MITIGATION FOR STATE DEPARTMENT BUILDING

ADDRESS
SAN JOSE STREET
SAN JUAN, PUERTO RICO

OWNER:

SEAL:

DRAWN BY:	D. LUGO
REVIEWED BY:	P. J. VAGNETTI
DATE:	2021-09-09
PROJECT NO:	21-720

NO.	REVISION	DATE

SHEET TITLE:
EXISTING & DEMOLITION ROOF LEVEL PLAN

PAGE NUMBER
D-1.4

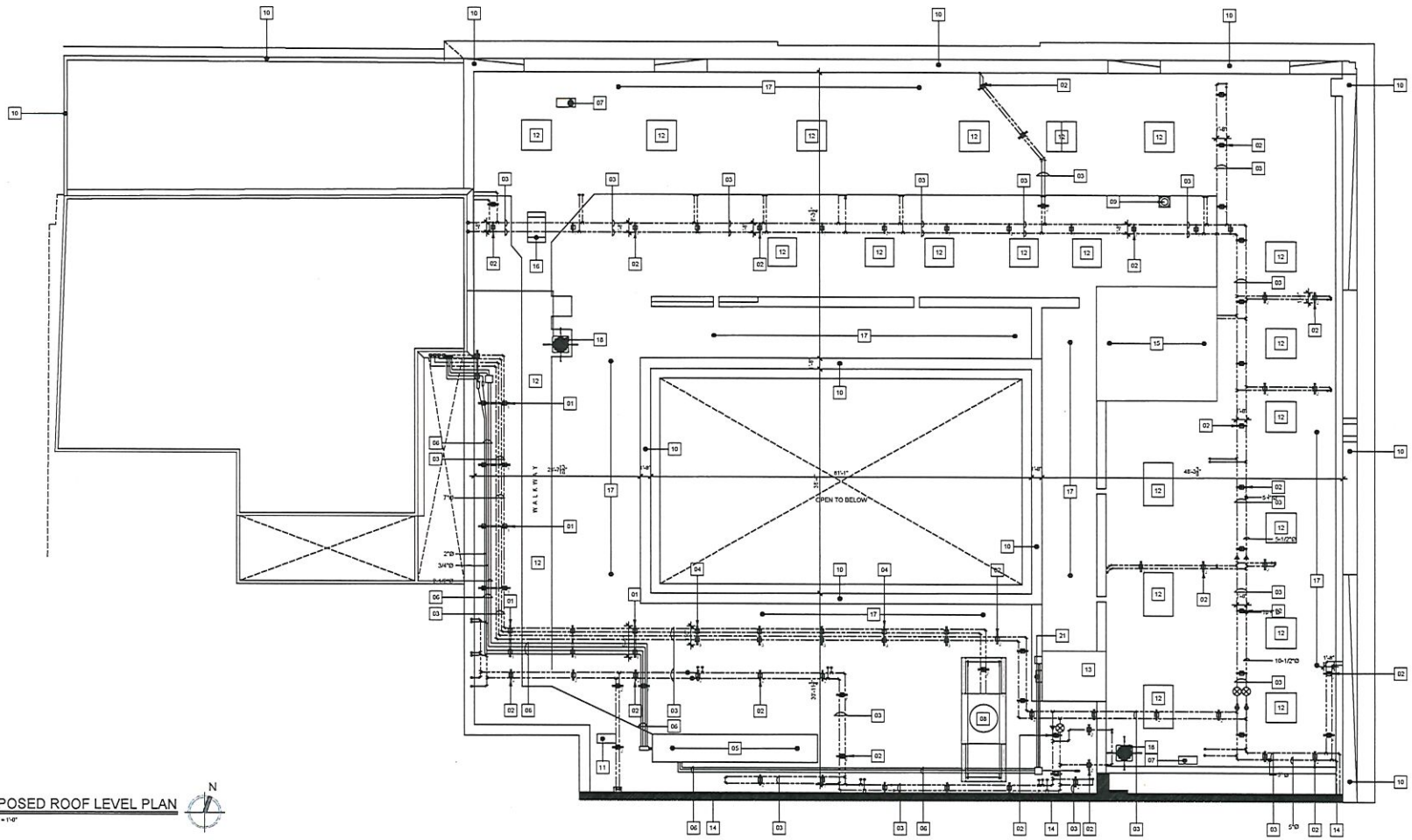

PROPOSED ROOF LEVEL PLAN

SCALE: 1/8" = 1'-0"

N

PROPOSED ROOF KEY NOTES:

01 NEW STEEL STAND TYPE "1" (TYPICAL) SEE DETAIL ON SHEET A-1.2.

02 NEW STEEL STAND TYPE "2" (TYPICAL) SEE DETAIL ON SHEET A-1.2.

03 EXISTING A/C WATER PIPES TO REMAIN (TYPICAL).

04 NEW STEEL STAND TYPE "3" (TYPICAL) SEE DETAIL ON SHEET A-1.2.

05 EXISTING ELECTRICAL SUBSTATION TO REMAIN.

06 EXISTING ELECTRICAL CONDUITS TO REMAIN (TYPICAL).

07 EXISTING A/C EQUIPMENT TO REMAIN.

08 EXISTING CHILLERS COOLING TOWER TO BE PROPERLY ANCHORED SEE DETAILS ON SHEET A-1.2.

09 EXISTING EXHAUST TO REMAIN.

10 EXISTING MASONRY PARAPET TO REMAIN.

11 EXISTING ELECTRICAL EQUIPMENT TO REMAIN.

12 EXISTING FLOOR PAD TO REMAIN.

13 EXISTING MECH. ROOM TO REMAIN.

14 EXISTING MASONRY WALL TO REMAIN.

15 EXISTING STAIR ROOF TO REMAIN.

16 EXISTING STEPS TO REMAIN.

17 EXISTING ROOFING MATERIAL. CONTRACTOR SHALL COORDINATE W/ OWNER AND/OR ROOF CONTRACTOR TO COORDINATE ANY PERFORATION TO EXISTING ROOFING MATERIAL IN ORDER TO MANTAIN THE ROOFING WORKS WARRANTY IF ANY. SEE NOTES #1 AND #2 ON THIS SHEET.

18 EXISTING CONDENSING UNITS TO BE PROPERLY ANCHORED. SEE DETAILS ON SHEET A-1.2

19 EXISTING A/C COOLING TOWER TO BE PROPERLY ANCHORED.

20 EXISTING A/C COOLING TOWER STEEL BASE TO BE CLEANED AND PAINTED.

PRIMER: UNIFLEX RUST INHIBITIVE METAL PRIMER
PAINT: PRO INDUSTRIAL HIGH PERFORMANCE EPOXY
COLOR: SW 7005 PURE WHITE

*SEE NOTE #3 ON THIS SHEET.

21 EXISTING RELOCATED A/C COOLING TOWER ELECTRICAL PANEL. CONTRACTOR SHALL COORDINATE ALL EXISTING ELECTRICAL CONDUITS IN ORDER TO PROPERLY RELOCATE THE EXISTING ELECTRICAL PANEL. CONTRACTOR SHALL CONSIDER ANY COORDINATION THE COOLING TOWER MANUFACTURER IN ORDER TO PROPERLY RELOCATE THE ELECTRICAL PANEL. SEE NOTE #4 ON THIS SHEET.

LEGEND

1 NEW STEEL STAND TYPE "1" FOR A/C & ELECTRICAL PIPES

2 NEW STEEL STAND TYPE "2" FOR A/C & ELECTRICAL PIPES

3 NEW STEEL STAND TYPE "3" FOR A/C & ELECTRICAL PIPES

EXISTING A/C PIPES TO REMAIN.

EXISTING ELECTRICAL CONDUITS TO REMAIN.

IMPORTANT NOTES ABOUT THE ROOF WORKS IN THIS PROJECT

1. CONTRACTOR SHALL COORDINATE WITH OWNER AND / OR ROOFING CONTRACTOR THAT INSTALLED THE EXISTING ROOF IMPERMEABILIZATION SYSTEM IN ORDER TO MAINTAIN THE EXISTING WARRANTY OF THE ROOFING WORKS IF ANY.
2. CONTRACTOR SHALL CONSIDER THE FOLLOWING ITEMS:
   - ANY ASBESTOS AND LEAD REPORT BEFORE REMOTION OF EXISTING ROOF IMPERMEABILIZATION SYSTEM.
3. CONTRACTOR SHALL COORDINATE WITH PAINT PROVIDER FOR THE STEEL STANDS AND/OR BASE IN ORDER TO PROPERLY CLEAN, COVER AND PROTECT THE STEEL ELEMENTS OF CORROSION.
4. THE CONTRACTOR MUST VISIT THE PROJECT TO GET FAMILIAR WITH THE EXISTING CONDITIONS AND UNDERSTAND THE SCOPE OF THE ENTIRE ROOF WORKS TO BE COMPLETED.
5. CONTRACTOR MUST CONFIRM ALL MEASUREMENTS, ELEVATION LEVELS, VERIFY ALL PIPES DIAMETERS AND OTHER EXISTING CONDITIONS OBSERVED ON SITE. SHALL THERE BE ANY DIFFERENCE BETWEEN THE EXISTING CONDITIONS (MEASUREMENTS, LEVELS ETC.) THESE MUST BE BROUGHT TO THE ENGINEER'S AND ARCHITECT'S ATTENTION FOR IMMEDIATE RECONCILIATION WITH THE DESIGN. UNDER NO CIRCUMSTANCE, WILL THE CONTRACTOR PROCEED WITH ANY PORTION OF THE WORK OBSERVED TO BE DIFFERENT THAN WHAT IS SHOWN IN THESE DRAWINGS.
6. ANY DEVIATION FROM THE INFORMATION INDICATED IN THESE DRAWINGS WITHOUT FORMAL APPROVAL FROM THE ARCHITECT AND/OR ENGINEER, MAY IMPOSE ALL RESPONSIBILITY ON THE CONTRACTOR, THE OWNER OR HIS REPRESENTATIVE IN THIS PROJECT MAY REQUIRE THE REMOVAL OF ANY PORTION OF THE WORK FOUND TO BE NON-CONFORMING WITH THE DESIGN REQUIREMENTS.
7. CONTRACTOR MUST ADVISE THE ARCHITECT AND/OR ENGINEER IF ANY UNFORESEEN COMPLICATION IS DISCOVERED ON SITE THAT MAY PREVENT THE PROJECT COMPONENTS TO BE CONNECTED AS REQUIRED IN THESE DRAWINGS.
8. THE CONTRACTOR MUST ENSURE THAT ANY PORTION OF THE EXISTING BUILDING NOT CALLED FOR DEMOLITION IS PROTECTED AND SUFFERS NO DAMAGE DURING THE EXECUTION OF THE DEMOLITION - CONSTRUCTION WORKS. THIS MAY REQUIRE THE CONSTRUCTION OF TEMPORARY PROTECTION SHELTERS, BARRIERS, PANELING OR THE LIKE AS ESTEEMED NECESSARY. ANY DAMAGE ON ANY PART OF THE PROPERTY THAT RESULTS AS PART OF CARELESS EXECUTION FROM THE CONTRACTOR MUST BE PROMPTLY REPAIRED/REPLACED AT NO EXPENSE TO THE OWNER.

ENGINEERED ADVANTAGE, PSC
P.O. BOX 6205
San Juan, Puerto Rico 00914
p. 787-756-0032 email:pvagnetti@eapsc.net

PROJECT: CONSTRUCTION FOR HAZARD MITIGATION FOR STATE DEPARTMENT BUILDING

ADDRESS: SAN JOSE STREET SAN JUAN, PUERTO RICO

OWNER:

SEAL:

DRAWN BY:	D. LUGO
REVIEWED BY:	P. J. VAGNETTI
DATE:	2021-09-09
PROJECT NO:	21-720

NO.	REVISION	DATE

SHEET TITLE: PROPOSED ROOF LEVEL PLAN

PAGE NUMBER: A-1.1

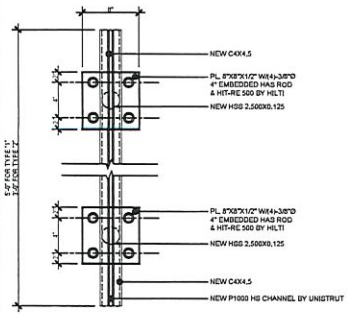

TOP VIEW

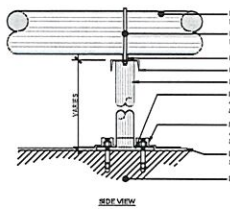

SIDE VIEW

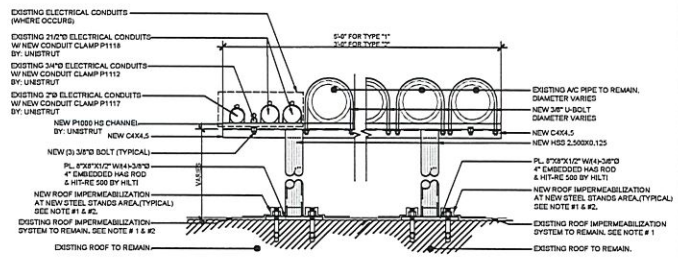

FRONT VIEW

STEEL STAND TYPE "1" & "3" DETAILS

SCALE: 1-1/2"=1'-0"

STEEL STAND PAINT FINISH

PRIMER: UNIFLEX RUST INHIBITIVE METAL PRIMER BY SHERWIN-WILLIAMS

PAINT: PRO INDUSTRIAL HIGH PERFORMANCE EPOXY COLOR: SW 7005 PURE WHITE BY SHERWIN-WILLIAMS

* SEE NOTE #3 ON THIS SHEET.

IMPORTANT NOTES ABOUT THE ROOF WORKS IN THIS PROJECT

1. CONTRACTOR SHALL COORDINATE WITH OWNER AND / OR ROOFING CONTRACTOR THAT INSTALLED THE EXISTING ROOF IMPERMEABILIZATION SYSTEM IN ORDER TO MAINTAIN THE EXISTING WARRANTY OF THE ROOFING WORKS IF ANY.
2. CONTRACTOR SHALL CONSIDER THE FOLLOWING ITEMS:
   - ANY ASBESTOS AND LEAD REPORT BEFORE REMOTION OF EXISTING ROOF IMPERMEABILIZATION SYSTEM.
3. CONTRACTOR SHALL COORDINATE WITH PAINT PROVIDER FOR THE STEEL STANDS AND/ OR BASE IN ORDER TO PROPERLY CLEAN, COVER AND PROTECT THE STEEL ELEMENTS OF CORROSION.
4. THE CONTRACTOR MUST VISIT THE PROJECT TO GET FAMILIAR WITH THE EXISTING CONDITIONS AND UNDERSTAND THE SCOPE OF THE ENTIRE ROOF WORKS TO BE COMPLETED.

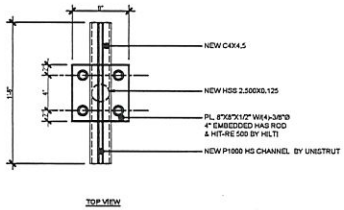

TOP VIEW

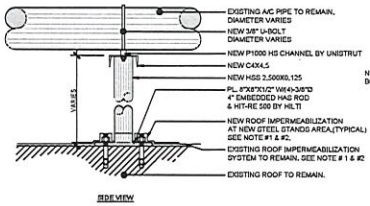

SIDE VIEW

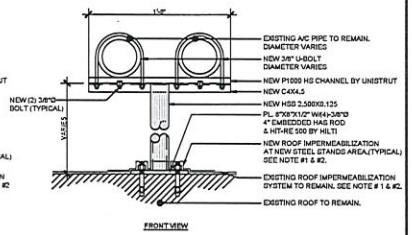

FRONT VIEW

STEEL STAND TYPE "2" DETAILS

SCALE: 1-1/2"=1'-0"

STEEL STAND PAINT FINISH

PRIMER: UNIFLEX RUST INHIBITIVE METAL PRIMER BY SHERWIN-WILLIAMS

PAINT: PRO INDUSTRIAL HIGH PERFORMANCE EPOXY COLOR: SW 7005 PURE WHITE BY SHERWIN-WILLIAMS

* SEE NOTE #3 ON THIS SHEET.

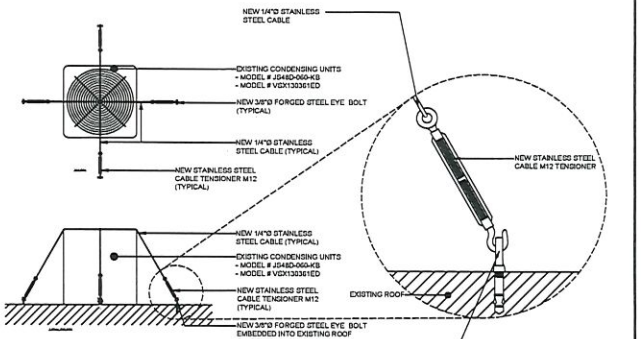

CONDENSING UNITS TYPICAL ANCHOR DETAILS

SCALE: 1/2"=1'-0"

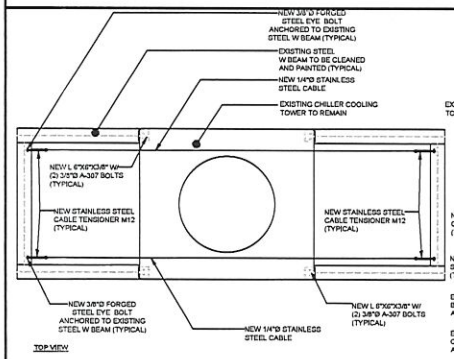

TOP VIEW

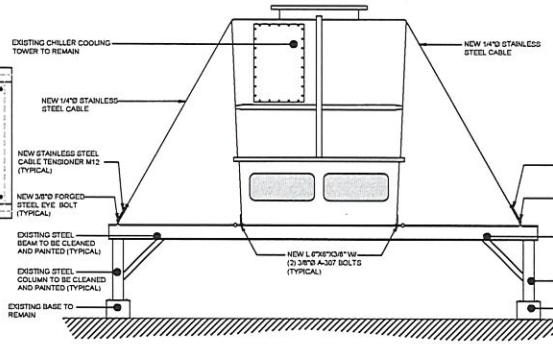

SIDE VIEW

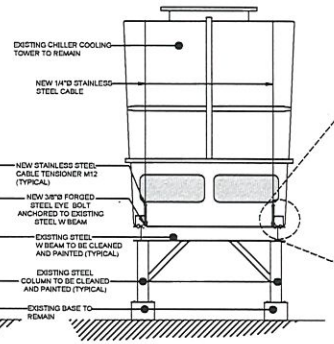

FRONT VIEW

COOLING TOWER ANCHOR DETAILS

SCALE: 3/8"=1'-0"

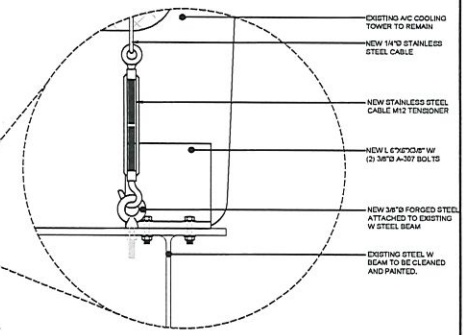

COOLING TOWER ANCHOR DETAIL BLOW UP

SCALE: 3"=1'-0"

ENGINEERED ADVANTAGE, PSC
P.O. BOX 6025
San Juan, Puerto Rico 00914
p. 787-756-6032 email.pjvagnetti@eapsc.net

PROJECT: CONSTRUCTION FOR HAZARD MITIGATION FOR STATE DEPARTMENT BUILDING

ADDRESS: SAN JOSE STREET SAN JUAN, PUERTO RICO

OWNER:

SEAL:

DRAWN BY:	D. LUGO
REVIEWED BY:	P. J. VAGNETTI
DATE:	2021-09-09
PROJECT NO:	21-720

NO.	REVISION	DATE

SHEET TITLE:

STEEL STANDS & A/C EQUIPMENT ANCHORAGE DETAILS

PAGE NUMBER

A-1.2

EXISTING WINDOWS & LOCKING HARDWARE & NEW LOCKING HARDWARE SCHEDULE

	MKD	ROUGH OPENING SIZE		WINDOWS												FRAME			REMARKS
								EXISTING LOCKING HARDWARE				NEW LOCKING HARDWARE							
								VERTICAL LOCKING DEVICES		HORIZONTAL LOCKING DEVICES		VERTICAL LOCKING DEVICES		HORIZONTAL LOCKING DEVICES (LATCH TYPE) AT CENTER OF LEAVES					
		WIDTH (APPROX.)	HEIGHT (APPROX.)	WIDTH (APPROX.)	HEIGHT (APPROX.)	THICK	MAT.	TOP	BOTTOM	TOP	BOTTOM	TOP	BOTTOM	TOP	BOTTOM	MAT.	JAMB	HEAD	
FIRST LEVEL	(A1)	4'-8 11/16"	8'-4"	1'-10" (EACH LEAVES)	7'-10"	1-3/4"	WOOD	2	2	—	—	2	2	—	—	WOOD	DETAIL "7" SHEET A-2.1	DETAIL "5" SHEET A-2.1	SEE DETAILS ON SHEET A-2.1, SEE NOTE #11
	(A2)	4'-8 11/16"	8'-4"	1'-10" (EACH LEAVES)	7'-10"	1-3/4"	WOOD	3	3	—	—	1	1	—	—	WOOD	DETAIL "7" SHEET A-2.1	DETAIL "5" SHEET A-2.1	SEE DETAILS ON SHEET A-2.1, SEE NOTE #11
	(A3)	4'-8 11/16"	8'-4"	1'-10" (EACH LEAVES)	7'-10"	1-3/4"	WOOD	2	2	—	—	2	2	—	—	WOOD	DETAIL "7" SHEET A-2.1	DETAIL "5" SHEET A-2.1	SEE DETAILS ON SHEET A-2.1, SEE NOTE #11
	(A4)	4'-8 11/16"	8'-4"	1'-10" (EACH LEAVES)	7'-10"	1-3/4"	WOOD	3	3	—	—	1	1	—	—	WOOD	DETAIL "7" SHEET A-2.1	DETAIL "5" SHEET A-2.1	SEE DETAILS ON SHEET A-2.1, SEE NOTE #11
	(A5)	4'-8 11/16"	8'-4"	1'-10" (EACH LEAVES)	7'-10"	1-3/4"	WOOD	3	3	—	—	1	1	—	—	WOOD	DETAIL "7" SHEET A-2.1	DETAIL "5" SHEET A-2.1	SEE DETAILS ON SHEET A-2.1, SEE NOTE #11
	(A6)	4'-8 11/16"	8'-4"	1'-10" (EACH LEAVES)	7'-10"	1-3/4"	WOOD	2	2	—	—	2	2	—	—	WOOD	DETAIL "7" SHEET A-2.1	DETAIL "5" SHEET A-2.1	SEE DETAILS ON SHEET A-2.1, SEE NOTE #11
	(A7)	4'-8 11/16"	8'-4"	1'-10" (EACH LEAVES)	7'-10"	1-3/4"	WOOD	3	3	—	—	1	1	—	—	WOOD	DETAIL "7" SHEET A-2.1	DETAIL "5" SHEET A-2.1	SEE DETAILS ON SHEET A-2.1, SEE NOTE #11
	(A8)	4'-8 11/16"	8'-4"	1'-10" (EACH LEAVES)	7'-10"	1-3/4"	WOOD	3	3	—	—	1	1	—	—	WOOD	DETAIL "7" SHEET A-2.1	DETAIL "5" SHEET A-2.1	SEE DETAILS ON SHEET A-2.1, SEE NOTE #11
	(A9)	4'-8 11/16"	8'-4"	1'-10" (EACH LEAVES)	7'-10"	1-3/4"	WOOD	3	3	—	—	1	1	—	—	WOOD	DETAIL "7" SHEET A-2.1	DETAIL "5" SHEET A-2.1	SEE DETAILS ON SHEET A-2.1, SEE NOTE #11
	(A10)	4'-8 11/16"	8'-4"	1'-10" (EACH LEAVES)	7'-10"	1-3/4"	WOOD	3	3	—	—	1	1	—	—	WOOD	DETAIL "7" SHEET A-2.1	DETAIL "5" SHEET A-2.1	SEE DETAILS ON SHEET A-2.1, SEE NOTE #11
	(A11)	4'-8 11/16"	8'-4"	1'-10" (EACH LEAVES)	7'-10"	1-3/4"	WOOD	3	3	—	—	1	1	—	—	WOOD	DETAIL "7" SHEET A-2.1	DETAIL "5" SHEET A-2.1	SEE DETAILS ON SHEET A-2.1, SEE NOTE #11
	(A12)	4'-8 11/16"	8'-4"	1'-10" (EACH LEAVES)	7'-10"	1-3/4"	WOOD	3	3	—	—	1	1	—	—	WOOD	DETAIL "7" SHEET A-2.1	DETAIL "5" SHEET A-2.1	SEE DETAILS ON SHEET A-2.1, SEE NOTE #11
	(B1)	4'-9 3/8"	9'-9"	2'-2" (EACH LEAVES)	9'-4"	1-3/4"	WOOD	1	1	—	—	1	1	1	1	WOOD	DETAIL "7" SHEET A-2.1	DETAIL "5" SHEET A-2.1	SEE DETAILS ON SHEET A-2.1, SEE NOTE #11
	(B2)	4'-9 3/8"	9'-9"	2'-2" (EACH LEAVES)	9'-4"	1-3/4"	WOOD	1	1	—	—	1	1	1	1	WOOD	DETAIL "7" SHEET A-2.1	DETAIL "5" SHEET A-2.1	SEE DETAILS ON SHEET A-2.1, SEE NOTE #11
	(B3)	4'-9 3/8"	9'-9"	2'-2" (EACH LEAVES)	9'-4"	1-3/4"	WOOD	1	1	—	—	1	1	1	1	WOOD	DETAIL "7" SHEET A-2.1	DETAIL "5" SHEET A-2.1	SEE DETAILS ON SHEET A-2.1, SEE NOTE #11
	(B4)	4'-9 3/8"	9'-9"	2'-2" (EACH LEAVES)	9'-4"	1-3/4"	WOOD	1	1	—	—	1	1	1	1	WOOD	DETAIL "7" SHEET A-2.1	DETAIL "5" SHEET A-2.1	SEE DETAILS ON SHEET A-2.1, SEE NOTE #11
	(B5)	4'-9 3/8"	9'-9"	2'-2" (EACH LEAVES)	9'-4"	1-3/4"	WOOD	1	1	—	—	1	1	1	1	WOOD	DETAIL "7" SHEET A-2.1	DETAIL "5" SHEET A-2.1	SEE DETAILS ON SHEET A-2.1, SEE NOTE #11
	(B6)	4'-9 3/8"	9'-9"	2'-2" (EACH LEAVES)	9'-4"	1-3/4"	WOOD	1	1	—	—	1	1	1	1	WOOD	DETAIL "7" SHEET A-2.1	DETAIL "5" SHEET A-2.1	SEE DETAILS ON SHEET A-2.1, SEE NOTE #11
SECOND LEVEL	(C1)	4'-4"	9'-10 1/4"	2'-1 1/2" (EACH LEAVES)	9'-7 1/4"	1-3/4"	WOOD	1	1	—	—	1	1	1	1	WOOD	DETAIL "7" SHEET A-2.1	DETAIL "5" SHEET A-2.1	SEE DETAILS ON SHEET A-2.1, SEE NOTE #11
	(C2)	4'-4"	9'-10 1/4"	2'-1 1/2" (EACH LEAVES)	9'-7 1/4"	1-3/4"	WOOD	1	1	—	—	1	1	1	1	WOOD	DETAIL "7" SHEET A-2.1	DETAIL "5" SHEET A-2.1	SEE DETAILS ON SHEET A-2.1, SEE NOTE #11
	(C3)	4'-4"	9'-10 1/4"	2'-1 1/2" (EACH LEAVES)	9'-7 1/4"	1-3/4"	WOOD	1	1	—	—	1	1	1	1	WOOD	DETAIL "7" SHEET A-2.1	DETAIL "5" SHEET A-2.1	SEE DETAILS ON SHEET A-2.1, SEE NOTE #11
	(C4)	4'-4"	9'-10 1/4"	2'-1 1/2" (EACH LEAVES)	9'-7 1/4"	1-3/4"	WOOD	1	1	—	—	1	1	1	1	WOOD	DETAIL "7" SHEET A-2.1	DETAIL "5" SHEET A-2.1	SEE DETAILS ON SHEET A-2.1, SEE NOTE #11
	(C5)	4'-4"	9'-10 1/4"	2'-1 1/2" (EACH LEAVES)	9'-7 1/4"	1-3/4"	WOOD	1	1	—	—	1	1	1	1	WOOD	DETAIL "7" SHEET A-2.1	DETAIL "5" SHEET A-2.1	SEE DETAILS ON SHEET A-2.1, SEE NOTE #11
	(C6)	4'-4"	9'-10 1/4"	2'-1 1/2" (EACH LEAVES)	9'-7 1/4"	1-3/4"	WOOD	1	1	—	—	1	1	1	1	WOOD	DETAIL "7" SHEET A-2.1	DETAIL "5" SHEET A-2.1	SEE DETAILS ON SHEET A-2.1, SEE NOTE #11
	(C7)	4'-4"	9'-10 1/4"	2'-1 1/2" (EACH LEAVES)	9'-7 1/4"	1-3/4"	WOOD	1	1	—	—	1	1	1	1	WOOD	DETAIL "7" SHEET A-2.1	DETAIL "5" SHEET A-2.1	SEE DETAILS ON SHEET A-2.1, SEE NOTE #11
	(C8)	4'-4"	5'-10"	2'-8" (EACH LEAVES)	5'-4"	1-3/4"	WOOD	1	—	—	—	1	2	—	—	WOOD	DETAIL "7" SHEET A-2.2	DETAIL "5" SHEET A-2.2	SEE DETAILS ON SHEET A-2.2, SEE NOTE #12
	(C9)	4'-4"	5'-10"	2'-8" (EACH LEAVES)	5'-4"	1-3/4"	WOOD	1	1	—	—	1	1	—	—	WOOD	DETAIL "7" SHEET A-2.2	DETAIL "5" SHEET A-2.2	SEE DETAILS ON SHEET A-2.2, SEE NOTE #12
	(C10)	4'-4"	5'-10"	2'-8" (EACH LEAVES)	5'-4"	1-3/4"	WOOD	1	1	—	—	1	1	—	—	WOOD	DETAIL "7" SHEET A-2.2	DETAIL "5" SHEET A-2.2	SEE DETAILS ON SHEET A-2.2, SEE NOTE #12
THIRD LEVEL	(D1)	4'-3 3/4"	7'-6 1/8"	1'-11 1/2" (EACH LEAVES)	6'-11 1/8"	1-3/4"	WOOD	1	1	—	—	1	1	—	—	WOOD	DETAIL "7" SHEET A-2.2	DETAIL "5" SHEET A-2.2	SEE DETAILS ON SHEET A-2.2, SEE NOTE #11
	(D2)	4'-3 3/4"	7'-6 1/8"	1'-11 1/2" (EACH LEAVES)	6'-11 1/8"	1-3/4"	WOOD	1	1	—	—	1	1	—	—	WOOD	DETAIL "7" SHEET A-2.2	DETAIL "5" SHEET A-2.2	SEE DETAILS ON SHEET A-2.2, SEE NOTE #11
	(D3)	4'-3 3/4"	7'-6 1/8"	1'-11 1/2" (EACH LEAVES)	6'-11 1/8"	1-3/4"	WOOD	1	1	—	—	1	1	—	—	WOOD	DETAIL "7" SHEET A-2.2	DETAIL "5" SHEET A-2.2	SEE DETAILS ON SHEET A-2.2, SEE NOTE #11
	(D4)	4'-3 3/4"	7'-6 1/8"	1'-11 1/2" (EACH LEAVES)	6'-11 1/8"	1-3/4"	WOOD	1	1	—	—	1	1	—	—	WOOD	DETAIL "7" SHEET A-2.2	DETAIL "5" SHEET A-2.2	SEE DETAILS ON SHEET A-2.2, SEE NOTE #11
	(D5)	4'-3 3/4"	7'-6 1/8"	1'-11 1/2" (EACH LEAVES)	6'-11 1/8"	1-3/4"	WOOD	1	1	—	—	1	1	—	—	WOOD	DETAIL "7" SHEET A-2.2	DETAIL "5" SHEET A-2.2	SEE DETAILS ON SHEET A-2.2, SEE NOTE #11
	(D6)	4'-3 3/4"	7'-6 1/8"	1'-11 1/2" (EACH LEAVES)	6'-11 1/8"	1-3/4"	WOOD	1	1	—	—	1	1	—	—	WOOD	DETAIL "7" SHEET A-2.2	DETAIL "5" SHEET A-2.2	SEE DETAILS ON SHEET A-2.2, SEE NOTE #11
	(D7)	4'-3 3/4"	7'-6 1/8"	1'-11 1/2" (EACH LEAVES)	6'-11 1/8"	1-3/4"	WOOD	1	1	—	—	1	1	—	—	WOOD	DETAIL "7" SHEET A-2.2	DETAIL "5" SHEET A-2.2	SEE DETAILS ON SHEET A-2.2, SEE NOTE #11
	(D8)	4'-3 3/4"	7'-6 1/8"	1'-11 1/2" (EACH LEAVES)	6'-11 1/8"	1-3/4"	WOOD	1	1	—	—	1	1	—	—	WOOD	DETAIL "7" SHEET A-2.2	DETAIL "5" SHEET A-2.2	SEE DETAILS ON SHEET A-2.2, SEE NOTE #11
	(D9)	4'-3 3/4"	7'-6 1/8"	1'-11 1/2" (EACH LEAVES)	6'-11 1/8"	1-3/4"	WOOD	1	1	—	—	1	1	—	—	WOOD	DETAIL "7" SHEET A-2.2	DETAIL "5" SHEET A-2.2	SEE DETAILS ON SHEET A-2.2, SEE NOTE #11
	(D10)	4'-3 3/4"	7'-6 1/8"	1'-11 1/2" (EACH LEAVES)	6'-11 1/8"	1-3/4"	WOOD	1	1	—	—	1	1	—	—	WOOD	DETAIL "7" SHEET A-2.2	DETAIL "5" SHEET A-2.2	SEE DETAILS ON SHEET A-2.2, SEE NOTE #11
	(D11)	4'-3 3/4"	7'-6 1/8"	1'-11 1/2" (EACH LEAVES)	6'-11 1/8"	1-3/4"	WOOD	1	1	—	—	1	1	—	—	WOOD	DETAIL "7" SHEET A-2.2	DETAIL "5" SHEET A-2.2	SEE DETAILS ON SHEET A-2.2, SEE NOTE #11
	(D12)	4'-3 3/4"	7'-6 1/8"	1'-11 1/2" (EACH LEAVES)	6'-11 1/8"	1-3/4"	WOOD	1	1	—	—	1	1	—	—	WOOD	DETAIL "7" SHEET A-2.2	DETAIL "5" SHEET A-2.2	SEE DETAILS ON SHEET A-2.2, SEE NOTE #11
	(D13)	4'-4"	9'-10 1/4"	2'-1 1/2" (EACH LEAVES)	9'-7 1/4"	1-3/4"	WOOD	1	1	—	—	1	1	1	1	WOOD	DETAIL "7" SHEET A-2.2	DETAIL "5" SHEET A-2.2	SEE DETAILS ON SHEET A-2.2, SEE NOTE #11
	(D14)	4'-4"	9'-10 1/4"	2'-1 1/2" (EACH LEAVES)	9'-7 1/4"	1-3/4"	WOOD	1	1	—	—	1	1	1	1	WOOD	DETAIL "7" SHEET A-2.2	DETAIL "5" SHEET A-2.2	SEE DETAILS ON SHEET A-2.2, SEE NOTE #11
	(D15)	4'-4"	9'-10 1/4"	2'-1 1/2" (EACH LEAVES)	9'-7 1/4"	1-3/4"	WOOD	1	1	—	—	1	1	1	1	WOOD	DETAIL "7" SHEET A-2.2	DETAIL "5" SHEET A-2.2	SEE DETAILS ON SHEET A-2.2, SEE NOTE #11
	(D16)	4'-4"	9'-10 1/4"	2'-1 1/2" (EACH LEAVES)	9'-7 1/4"	1-3/4"	WOOD	1	1	—	—	1	1	1	1	WOOD	DETAIL "7" SHEET A-2.2	DETAIL "5" SHEET A-2.2	SEE DETAILS ON SHEET A-2.2, SEE NOTE #11
	(D17)	4'-4"	9'-10 1/4"	2'-1 1/2" (EACH LEAVES)	9'-7 1/4"	1-3/4"	WOOD	1	1	—	—	1	1	1	1	WOOD	DETAIL "7" SHEET A-2.2	DETAIL "5" SHEET A-2.2	SEE DETAILS ON SHEET A-2.2, SEE NOTE #11
	(D18)	4'-4"	9'-10 1/4"	2'-1 1/2" (EACH LEAVES)	9'-7 1/4"	1-3/4"	WOOD	1	1	—	—	1	1	1	1	WOOD	DETAIL "7" SHEET A-2.2	DETAIL "5" SHEET A-2.2	SEE DETAILS ON SHEET A-2.2, SEE NOTE #11
	(D19)	4'-4"	9'-10 1/4"	2'-1 1/2" (EACH LEAVES)	9'-7 1/4"	1-3/4"	WOOD	1	1	—	—	1	1	1	1	WOOD	DETAIL "7" SHEET A-2.2	DETAIL "5" SHEET A-2.2	SEE DETAILS ON SHEET A-2.2, SEE NOTE #11
	(D20)	4'-4"	9'-10 1/4"	2'-1 1/2" (EACH LEAVES)	9'-7 1/4"	1-3/4"	WOOD	1	1	—	—	1	1	1	1	WOOD	DETAIL "7" SHEET A-2.2	DETAIL "5" SHEET A-2.2	SEE DETAILS ON SHEET A-2.2, SEE NOTE #11
	(D21)	4'-4"	9'-10 1/4"	2'-1 1/2" (EACH LEAVES)	9'-7 1/4"	1-3/4"	WOOD	1	1	—	—	1	1	1	1	WOOD	DETAIL "7" SHEET A-2.2	DETAIL "5" SHEET A-2.2	SEE DETAILS ON SHEET A-2.2, SEE NOTE #11
	(D22)	4'-4"	9'-10 1/4"	2'-1 1/2" (EACH LEAVES)	9'-7 1/4"	1-3/4"	WOOD	1	1	—	—	1	1	1	1	WOOD	DETAIL "7" SHEET A-2.2	DETAIL "5" SHEET A-2.2	SEE DETAILS ON SHEET A-2.2, SEE NOTE #11
	(D23)	4'-4"	9'-10 1/4"	2'-1 1/2" (EACH LEAVES)	9'-7 1/4"	1-3/4"	WOOD	1	1	—	—	1	1	1	1	WOOD	DETAIL "7" SHEET A-2.2	DETAIL "5" SHEET A-2.2	SEE DETAILS ON SHEET A-2.2, SEE NOTE #11
	(D24)	4'-4"	9'-10 1/4"	2'-1 1/2" (EACH LEAVES)	9'-7 1/4"	1-3/4"	WOOD	1	1	—	—	1	1	1	1	WOOD	DETAIL "7" SHEET A-2.2	DETAIL "5" SHEET A-2.2	SEE DETAILS ON SHEET A-2.2, SEE NOTE #11
	(D25)	4'-4"	9'-10 1/4"	2'-1 1/2" (EACH LEAVES)	9'-7 1/4"	1-3/4"	WOOD	1	1	—	—	1	1	1	1	WOOD	DETAIL "7" SHEET A-2.2	DETAIL "5" SHEET A-2.2	SEE DETAILS ON SHEET A-2.2, SEE NOTE #11
	(D26)	4'-4"	9'-10 1/4"	2'-1 1/2" (EACH LEAVES)	9'-7 1/4"	1-3/4"	WOOD	1	1	—	—	1	1	1	1	WOOD	DETAIL "7" SHEET A-2.2	DETAIL "5" SHEET A-2.2	SEE DETAILS ON SHEET A-2.2, SEE NOTE #11
	(D27)	4'-4"	9'-10 1/4"	2'-1 1/2" (EACH LEAVES)	9'-7 1/4"	1-3/4"	WOOD	1	1	—	—	1	1	1	1	WOOD	DETAIL "7" SHEET A-2.2	DETAIL "5" SHEET A-2.2	SEE DETAILS ON SHEET A-2.2, SEE NOTE #11
	(D28)	4'-4"	9'-10 1/4"	2'-1 1/2" (EACH LEAVES)	9'-7 1/4"	1-3/4"	WOOD	1	1	—	—	1	1	1	1	WOOD	DETAIL "7" SHEET A-2.2	DETAIL "5" SHEET A-2.2	SEE DETAILS ON SHEET A-2.2, SEE NOTE #11
	(D29)	4'-2"	5'-8"	1'-11 1/2" (EACH LEAVES)	5'-2"	1-3/4"	WOOD	1	—	—	—	1	2	—	—	WOOD	DETAIL "7" SHEET A-2.2	DETAIL "5" SHEET A-2.2	SEE DETAILS ON SHEET A-2.3, SEE NOTE #12
	(D30)	4'-2"	5'-8"	1'-11 1/2" (EACH LEAVES)	5'-2"	1-3/4"	WOOD	1	1	—	—	1	1	—	—	WOOD	DETAIL "7" SHEET A-2.2	DETAIL "5" SHEET A-2.2	SEE DETAILS ON SHEET A-2.3, SEE NOTE #12
	(D31)	4'-2"	5'-8"	1'-11 1/2" (EACH LEAVES)	5'-2"	1-3/4"	WOOD	1	1	—	—	1	1	—	—	WOOD	DETAIL "7" SHEET A-2.2	DETAIL "5" SHEET A-2.2	SEE DETAILS ON SHEET A-2.3, SEE NOTE #12

IMPORTANT NOTES ABOUT WINDOWS DETAILS IN THIS PROJECT

1. ALL WINDOWS ELEVATIONS AND SECTIONS ARE FOR REFERENCE. CONTRACTOR SHALL VERIFY EACH WINDOWS DIMENSIONS INCLUDING MOLDINGS, FRAMES AND DOOR LEAVES IN ORDER TO COORDINATE THE PROPER INSTALLATION OF THE PROPOSED LOCKING HARDWARE AND WEATHERSTRIP COMPONENTS.

2. CONTRACTOR SHALL SUPPLY SHOP DRAWINGS FOR THE INSTALLATION OF EACH LOCKING HARDWARE AND WEATHER STRIP COMPONENTS.

3. WINDOWS SHALL BE REPAIRED AND OR ALIGNED (IF NEEDED) AND FINISHED IN ORDER TO MAINTAIN THE PROPER OPERATION OF LOCKING HARDWARE (EXISTING & PROPOSED), PROPER SEAL OF THE WEATHERSTRIP MATERIAL AND GOOD AESTHETIC AFTER THE INSTALLATION OF LOCKING HARDWARE AND WEATHERSTRIP MATERIAL.

4. PAINT OF WINDOWS THAT HAVE TO BE PAINTED (IF NEEDED) WILL BE SELECTED BY ARCHITECT / ENGINEER.

5. WINDOWS GAPS BETWEEN LEAVES AND/OR FRAME MAY VARIES. CONTRACTOR SHALL VERIFY EACH DOOR IN ORDER TO MAKE SURE THAT WEATHERSTRIP MATERIAL WILL COVER THAT GAP BETWEEN WINDOWS LEAVES AND OR FRAME AND PROPERLY SEAL THE GAP.

6. CONTRACTOR SHALL SUBMITT SHOP DRAWINGS OF THE PROPER INSTALLATIONS AND OR FABRICATIONS.

7. CONTRACTOR SHALL INSTALL ALL WEATHERSTRIPS AND LOCKING DEVICES AS PER MANUFACTURER INSTRUCTION AND OR RECOMMENDATIONS.

8. CONTRACTOR SHALL TEST THE WEATHERSTRIP MATERIAL ADHESION IN A SMALL AREA IN WINDOWS AND FRAMES BEFORE PROCEEDING ENTIRELY. CONTRACTOR IS RESPONSIBLE FOR BE SURE THAT THE SURFACE IS SMOOTH AND PREPARE SURFACE IF NECESSARY AS REQUIRED BY MANUFACTURER SPECIFICATIONS.

9. CONTRACTOR SHALL VERIFY THAT WINDOWS PROPERLY OPERATES (CLOSE, OPEN PROPERLY) INCLUDING ALL LOCKING DEVICES, AFTER WEATHERSTRIP AND LOCKING DEVICES INSTALLATIONS.

10. CONTRACTOR SHALL VISIT THE BUILDING TO GET FAMILIARIZED WITH THE ENTIRE SCOPE OF WORK.

11. HORIZONTAL LOCKING DEVICE (LATCH TYPE) AT CENTER OF LEAVES AS PER FEMA REPORT IS NOT CONSIDERED BY DESIGNER DUE TO LACK OF SPACE DUE TO MOLDINGS AT LEAVES.

12. DESIGNER RECOMMEND THE REPLACEMENT OF THIS WINDOWS DUE TO EXISTING BAD CONDITIONS. CONTRACTOR SHALL CONSIDER SUBMIT A SHOP DRAWING OF THE FABRICATION AND INSTALLATION OF THIS WINDOWS. WINDOWS SHALL BE AS THE SAME MATERIAL AS EXISTING.

ENGINEERED ADVANTAGE, PSC
P.O. BOX 6025
San Juan, Puerto Rico 00914
p. 787-756-6032 email.pjvagnetti@eapsc.net

PROJECT
CONSTRUCTION FOR
HAZARD MITIGATION FOR STATE DEPARTMENT BUILDING

ADDRESS
SAN JOSE STREET
SAN JUAN, PUERTO RICO

OWNER:

SEAL:

DRAWN BY:	D. LUGO
REVISED BY:	P. J. VAGNETTI
DATE:	2021-09-09
PROJECT NO:	20-720

NO.	REVISION	DATE.

SHEET TITLE:
EXISTING WINDOWS LOCKING HARDWARE & PROPOSED LOCKING HARDWARE SCHEDULE

PAGE NUMBER
A-2.0a

ENGINEERED ADVANTAGE, PSC
P.O. BOX 6025
San Juan, Puerto Rico 00914
p. 787-756-6032 email.pjvagnetti@eapsc.net

PROJECT: CONSTRUCTION FOR
HAZARD MITIGATION FOR STATE DEPARTMENT BUILDING

ADDRESS: SAN JOSE STREET
SAN JUAN, PUERTO RICO

OWNER:

SEAL:

DRAWN BY	D. LUGO
REVIEWED BY	P. J. VAGNETTI
DATE	2021-09-09
PROJECT NO.	20-720

NO.	REVISION	DATE

SHEET TITLE: EXISTING DOORS LOCKING HARDWARE & PROPOSED LOCKING HARDWARE SCHEDULE

PAGE NUMBER: A-2.0b

EXISTING DOORS & LOCKING HARDWARE & NEW LOCKING HARDWARE SCHEDULE

LEVEL	MKD	ROUGH OPENING SIZE WIDTH	ROUGH OPENING SIZE HEIGHT	DOORS WIDTH	DOORS HEIGHT	THICK	MAT.	EXISTING VERTICAL LOCKING DEVICES TOP	EXISTING VERTICAL LOCKING DEVICES BOTTOM	EXISTING HORIZONTAL LOCKING DEVICES TOP	EXISTING HORIZONTAL LOCKING DEVICES BOTTOM	NEW VERTICAL LOCKING DEVICES TOP	NEW VERTICAL LOCKING DEVICES BOTTOM	NEW HORIZONTAL LOCKING DEVICES (BARRICADE TYPE) TOP	NEW HORIZONTAL LOCKING DEVICES (BARRICADE TYPE) BOTTOM	FRAME MAT.	FRAME JAMB	FRAME HEAD	REMARKS
FIRST LEVEL	1	4'-0"	10'-11"	2'-1" (EACH LEAVES)	10'-8"	1-3/4"	WOOD	1	1	—	—	1	1	1	1	WOOD	DETAIL "2" SHEET A-2.10	DETAIL "5" SHEET A-2.10	SEE DETAILS ON SHEET A-2.4
	2	8'-6"	13'-0-3/4"	4'-6" (EACH LEAVES)	12'-9-3/4"	1-3/4"	WOOD	1	1	—	1	—	—	—	—	WOOD	DETAIL "2" SHEET A-2.10	DETAIL "5" SHEET A-2.10	SEE DETAILS ON SHEET A-2.4
	3	6'-11"	10'-10"	3'-2" (EACH LEAVES)	10'-7"	1-3/4"	WOOD	1	1	—	1	—	—	—	—	WOOD	DETAIL "2" SHEET A-2.10	DETAIL "5" SHEET A-2.10	SEE DETAILS ON SHEET A-2.5
	4a	4'-5"	8'-3"	2'-0" (EACH LEAVES)	8'-0"	1-3/4"	WOOD	1	1	—	—	—	—	—	—	WOOD	DETAIL "2" SHEET A-2.10	DETAIL "5" SHEET A-2.10	SEE DETAILS ON SHEET A-2.5
	4b	4'-5"	8'-3"	2'-0" (EACH LEAVES)	8'-0"	1-3/4"	WOOD	1	1	—	—	—	—	—	—	WOOD	DETAIL "2" SHEET A-2.10	DETAIL "5" SHEET A-2.10	SEE DETAILS ON SHEET A-2.5
	4c	4'-5"	8'-3"	2'-0" (EACH LEAVES)	8'-0"	1-3/4"	WOOD	1	1	—	—	—	—	—	—	WOOD	DETAIL "2" SHEET A-2.10	DETAIL "5" SHEET A-2.10	SEE DETAILS ON SHEET A-2.5
	4d	4'-5"	8'-3"	2'-0" (EACH LEAVES)	8'-0"	1-3/4"	WOOD	1	1	—	—	—	—	—	—	WOOD	DETAIL "2" SHEET A-2.10	DETAIL "5" SHEET A-2.10	SEE DETAILS ON SHEET A-2.5
	4e	4'-5"	8'-3"	2'-0" (EACH LEAVES)	8'-0"	1-3/4"	WOOD	1	1	—	—	—	—	—	—	WOOD	DETAIL "2" SHEET A-2.10	DETAIL "5" SHEET A-2.10	SEE DETAILS ON SHEET A-2.5
	4f	4'-5"	8'-3"	2'-0" (EACH LEAVES)	8'-0"	1-3/4"	WOOD	1	1	—	—	—	—	—	—	WOOD	DETAIL "2" SHEET A-2.10	DETAIL "5" SHEET A-2.10	SEE DETAILS ON SHEET A-2.5
	4g	4'-5"	8'-3"	2'-0" (EACH LEAVES)	8'-0"	1-3/4"	WOOD	1	1	—	—	—	—	—	—	WOOD	DETAIL "2" SHEET A-2.10	DETAIL "5" SHEET A-2.10	SEE DETAILS ON SHEET A-2.5
	4h	4'-5"	8'-3"	2'-0" (EACH LEAVES)	8'-0"	1-3/4"	WOOD	1	1	—	—	—	—	—	—	WOOD	DETAIL "2" SHEET A-2.10	DETAIL "5" SHEET A-2.10	SEE DETAILS ON SHEET A-2.5
	4i	4'-5"	8'-3"	2'-0" (EACH LEAVES)	8'-0"	1-3/4"	WOOD	1	1	—	—	—	—	—	—	WOOD	DETAIL "2" SHEET A-2.10	DETAIL "5" SHEET A-2.10	SEE DETAILS ON SHEET A-2.5
	4j	4'-5"	8'-3"	2'-0" (EACH LEAVES)	8'-0"	1-3/4"	WOOD	1	1	—	—	—	—	—	—	WOOD	DETAIL "2" SHEET A-2.10	DETAIL "5" SHEET A-2.10	SEE DETAILS ON SHEET A-2.5
	4k	4'-5"	8'-3"	2'-0" (EACH LEAVES)	8'-0"	1-3/4"	WOOD	1	1	—	—	—	—	—	—	WOOD	DETAIL "2" SHEET A-2.10	DETAIL "5" SHEET A-2.10	SEE DETAILS ON SHEET A-2.5
	4l	4'-5"	8'-3"	2'-0" (EACH LEAVES)	8'-0"	1-3/4"	WOOD	1	1	—	—	—	—	—	—	WOOD	DETAIL "2" SHEET A-2.10	DETAIL "5" SHEET A-2.10	SEE DETAILS ON SHEET A-2.5
	4m	4'-5"	8'-3"	2'-0" (EACH LEAVES)	8'-0"	1-3/4"	WOOD	1	1	—	—	—	—	—	—	WOOD	DETAIL "2" SHEET A-2.10	DETAIL "5" SHEET A-2.10	SEE DETAILS ON SHEET A-2.5
	4n	4'-5"	8'-3"	2'-0" (EACH LEAVES)	8'-0"	1-3/4"	WOOD	1	1	—	—	—	—	—	—	WOOD	DETAIL "2" SHEET A-2.10	DETAIL "5" SHEET A-2.10	SEE DETAILS ON SHEET A-2.5
	4o	4'-5"	8'-3"	2'-0" (EACH LEAVES)	8'-0"	1-3/4"	WOOD	1	1	—	—	—	—	—	—	WOOD	DETAIL "2" SHEET A-2.10	DETAIL "5" SHEET A-2.10	SEE DETAILS ON SHEET A-2.5
	4p	4'-5"	8'-3"	2'-0" (EACH LEAVES)	8'-0"	1-3/4"	WOOD	1	1	—	—	—	—	—	—	WOOD	DETAIL "2" SHEET A-2.10	DETAIL "5" SHEET A-2.10	SEE DETAILS ON SHEET A-2.6 (BATHROOMS DOOR W/ FIXED LOUVERS)
	4q	4'-5"	8'-3"	2'-0" (EACH LEAVES)	8'-0"	1-3/4"	WOOD	1	1	—	—	—	—	—	—	WOOD	DETAIL "2" SHEET A-2.10	DETAIL "5" SHEET A-2.10	SEE DETAILS ON SHEET A-2.6 (BATHROOMS DOOR W/ FIXED LOUVERS)
	5a	4'-0"	9'-6"	2'-1" (EACH LEAVES)	9'-3"	1-3/4"	WOOD	1	1	—	—	1	1	1	1	WOOD	DETAIL "2" SHEET A-2.10	DETAIL "5" SHEET A-2.10	SEE DETAILS ON SHEET A-2.6
	5b	4'-0"	9'-6"	2'-1" (EACH LEAVES)	9'-3"	1-3/4"	WOOD	1	1	—	—	1	1	1	1	WOOD	DETAIL "2" SHEET A-2.10	DETAIL "5" SHEET A-2.10	SEE DETAILS ON SHEET A-2.6
SECOND LEVEL	6a	4'-11"	9'-6"	1'-1 1/2" (EACH LEAVES)	9'-3"	1-3/4"	WOOD	3	3	—	—	1	1	—	—	WOOD	DETAIL "2" SHEET A-2.10	DETAIL "5" SHEET A-2.10	SEE DETAILS ON SHEET A-2.6
	6b	4'-11"	9'-6"	1'-1 1/2" (EACH LEAVES)	9'-3"	1-3/4"	WOOD	3	3	—	—	1	1	—	—	WOOD	DETAIL "2" SHEET A-2.10	DETAIL "5" SHEET A-2.10	SEE DETAILS ON SHEET A-2.6
	6c	4'-11"	9'-6"	1'-1 1/2" (EACH LEAVES)	9'-3"	1-3/4"	WOOD	3	3	—	—	1	1	—	—	WOOD	DETAIL "2" SHEET A-2.10	DETAIL "5" SHEET A-2.10	SEE DETAILS ON SHEET A-2.6
	6d	4'-11"	9'-6"	1'-1 1/2" (EACH LEAVES)	9'-3"	1-3/4"	WOOD	3	3	—	—	1	1	—	—	WOOD	DETAIL "2" SHEET A-2.10	DETAIL "5" SHEET A-2.10	SEE DETAILS ON SHEET A-2.6
	6e	4'-11"	9'-6"	1'-1 1/2" (EACH LEAVES)	9'-3"	1-3/4"	WOOD	3	3	—	—	1	1	—	—	WOOD	DETAIL "2" SHEET A-2.10	DETAIL "5" SHEET A-2.10	SEE DETAILS ON SHEET A-2.6
	6f	4'-11"	9'-6"	1'-1 1/2" (EACH LEAVES)	9'-3"	1-3/4"	WOOD	3	3	—	—	1	1	—	—	WOOD	DETAIL "2" SHEET A-2.10	DETAIL "5" SHEET A-2.10	SEE DETAILS ON SHEET A-2.6
	6g	4'-11"	9'-6"	1'-1 1/2" (EACH LEAVES)	9'-3"	1-3/4"	WOOD	3	3	—	—	1	1	—	—	WOOD	DETAIL "2" SHEET A-2.10	DETAIL "5" SHEET A-2.10	SEE DETAILS ON SHEET A-2.6
	6h	4'-11"	9'-6"	1'-1 1/2" (EACH LEAVES)	9'-3"	1-3/4"	WOOD	3	3	—	—	1	1	—	—	WOOD	DETAIL "2" SHEET A-2.10	DETAIL "5" SHEET A-2.10	SEE DETAILS ON SHEET A-2.6
	6i	4'-11"	9'-6"	1'-1 1/2" (EACH LEAVES)	9'-3"	1-3/4"	WOOD	3	3	—	—	1	1	—	—	WOOD	DETAIL "2" SHEET A-2.10	DETAIL "5" SHEET A-2.10	SEE DETAILS ON SHEET A-2.6
	6j	4'-11"	9'-6"	1'-1 1/2" (EACH LEAVES)	9'-3"	1-3/4"	WOOD	3	3	—	—	1	1	—	—	WOOD	DETAIL "2" SHEET A-2.10	DETAIL "5" SHEET A-2.10	SEE DETAILS ON SHEET A-2.6
	6k	4'-11"	9'-6"	1'-1 1/2" (EACH LEAVES)	9'-3"	1-3/4"	WOOD	3	3	—	—	1	1	—	—	WOOD	DETAIL "2" SHEET A-2.10	DETAIL "5" SHEET A-2.10	SEE DETAILS ON SHEET A-2.6
	7a	5'-0"	9'-6"	2'-3" (EACH LEAVES)	9'-3"	1-3/4"	WOOD	1	1	—	—	1	1	—	—	WOOD	DETAIL "2" SHEET A-2.10	DETAIL "5" SHEET A-2.10	SEE DETAILS ON SHEET A-2.7
	7b	5'-0"	9'-6"	2'-3" (EACH LEAVES)	9'-3"	1-3/4"	WOOD	1	1	—	—	1	1	—	—	WOOD	DETAIL "2" SHEET A-2.10	DETAIL "5" SHEET A-2.10	SEE DETAILS ON SHEET A-2.7
	7c	5'-0"	9'-6"	2'-3" (EACH LEAVES)	9'-3"	1-3/4"	WOOD	1	1	—	—	1	1	—	—	WOOD	DETAIL "2" SHEET A-2.10	DETAIL "5" SHEET A-2.10	SEE DETAILS ON SHEET A-2.7
	7d	5'-0"	9'-6"	2'-3" (EACH LEAVES)	9'-3"	1-3/4"	WOOD	1	1	—	—	1	1	—	—	WOOD	DETAIL "2" SHEET A-2.10	DETAIL "5" SHEET A-2.10	SEE DETAILS ON SHEET A-2.7
	7e	5'-0"	9'-6"	2'-3" (EACH LEAVES)	9'-3"	1-3/4"	WOOD	1	1	—	—	1	1	—	—	WOOD	DETAIL "2" SHEET A-2.10	DETAIL "5" SHEET A-2.10	SEE DETAILS ON SHEET A-2.7
	7f	5'-0"	9'-6"	2'-3" (EACH LEAVES)	9'-3"	1-3/4"	WOOD	1	1	—	—	1	1	—	—	WOOD	DETAIL "2" SHEET A-2.10	DETAIL "5" SHEET A-2.10	SEE DETAILS ON SHEET A-2.7
	7g	5'-0"	9'-6"	2'-3" (EACH LEAVES)	9'-3"	1-3/4"	WOOD	1	1	—	—	1	1	1	—	WOOD	DETAIL "2" SHEET A-2.10	DETAIL "5" SHEET A-2.10	SEE DETAILS ON SHEET A-2.7, SEE NOTE #11
	7h	5'-0"	9'-6"	2'-3" (EACH LEAVES)	9'-3"	1-3/4"	WOOD	1	1	—	—	1	1	1	—	WOOD	DETAIL "2" SHEET A-2.10	DETAIL "5" SHEET A-2.10	SEE DETAILS ON SHEET A-2.7, SEE NOTE #11
	7i	5'-0"	9'-6"	2'-3" (EACH LEAVES)	9'-3"	1-3/4"	WOOD	1	1	—	—	1	1	1	—	WOOD	DETAIL "2" SHEET A-2.10	DETAIL "5" SHEET A-2.10	SEE DETAILS ON SHEET A-2.7, SEE NOTE #11
	7j	5'-0"	9'-6"	2'-3" (EACH LEAVES)	9'-3"	1-3/4"	WOOD	1	1	—	—	1	1	1	—	WOOD	DETAIL "2" SHEET A-2.10	DETAIL "5" SHEET A-2.10	SEE DETAILS ON SHEET A-2.7, SEE NOTE #11
	7k	5'-0"	9'-6"	2'-3" (EACH LEAVES)	9'-3"	1-3/4"	WOOD	1	1	—	—	1	1	1	—	WOOD	DETAIL "2" SHEET A-2.10	DETAIL "5" SHEET A-2.10	SEE DETAILS ON SHEET A-2.7, SEE NOTE #11
	7l	5'-0"	9'-6"	2'-3" (EACH LEAVES)	9'-3"	1-3/4"	WOOD	1	1	—	—	1	1	1	—	WOOD	DETAIL "2" SHEET A-2.10	DETAIL "5" SHEET A-2.10	SEE DETAILS ON SHEET A-2.7, SEE NOTE #11
	7m	5'-0"	9'-6"	2'-3" (EACH LEAVES)	9'-3"	1-3/4"	WOOD	1	1	—	—	1	1	1	—	WOOD	DETAIL "2" SHEET A-2.10	DETAIL "5" SHEET A-2.10	SEE DETAILS ON SHEET A-2.7, SEE NOTE #11
	7n	5'-0"	9'-6"	2'-3" (EACH LEAVES)	9'-3"	1-3/4"	WOOD	1	1	—	—	1	1	1	—	WOOD	DETAIL "2" SHEET A-2.10	DETAIL "5" SHEET A-2.10	SEE DETAILS ON SHEET A-2.7, SEE NOTE #11
	7o	5'-0"	9'-6"	2'-3" (EACH LEAVES)	9'-3"	1-3/4"	WOOD	1	1	—	—	1	1	1	—	WOOD	DETAIL "2" SHEET A-2.10	DETAIL "5" SHEET A-2.10	SEE DETAILS ON SHEET A-2.7, SEE NOTE #11
	7p	5'-0"	9'-6"	2'-3" (EACH LEAVES)	9'-3"	1-3/4"	WOOD	1	1	—	—	1	1	1	—	WOOD	DETAIL "2" SHEET A-2.10	DETAIL "5" SHEET A-2.10	SEE DETAILS ON SHEET A-2.7, SEE NOTE #11
	7q	5'-0"	9'-6"	2'-3" (EACH LEAVES)	9'-3"	1-3/4"	WOOD	1	1	—	—	1	1	1	—	WOOD	DETAIL "2" SHEET A-2.10	DETAIL "5" SHEET A-2.10	SEE DETAILS ON SHEET A-2.7, SEE NOTE #11
	7r	5'-0"	9'-6"	2'-3" (EACH LEAVES)	9'-3"	1-3/4"	WOOD	1	1	—	—	1	1	1	—	WOOD	DETAIL "2" SHEET A-2.10	DETAIL "5" SHEET A-2.10	SEE DETAILS ON SHEET A-2.7, SEE NOTE #11
	7s	5'-0"	9'-6"	2'-3" (EACH LEAVES)	9'-3"	1-3/4"	WOOD	1	1	—	—	1	1	1	—	WOOD	DETAIL "2" SHEET A-2.10	DETAIL "5" SHEET A-2.10	SEE DETAILS ON SHEET A-2.7, SEE NOTE #11
	7t	5'-0"	9'-6"	2'-3" (EACH LEAVES)	9'-3"	1-3/4"	WOOD	1	1	—	—	1	1	1	—	WOOD	DETAIL "2" SHEET A-2.10	DETAIL "5" SHEET A-2.10	SEE DETAILS ON SHEET A-2.7, SEE NOTE #11
	7u	5'-0"	9'-6"	2'-3" (EACH LEAVES)	9'-3"	1-3/4"	WOOD	1	1	—	—	1	1	1	—	WOOD	DETAIL "2" SHEET A-2.10	DETAIL "5" SHEET A-2.10	SEE DETAILS ON SHEET A-2.7, SEE NOTE #11
	7v	5'-0"	9'-6"	2'-3" (EACH LEAVES)	9'-3"	1-3/4"	WOOD	1	1	—	—	1	1	1	—	WOOD	DETAIL "2" SHEET A-2.10	DETAIL "5" SHEET A-2.10	SEE DETAILS ON SHEET A-2.7, SEE NOTE #11
	7w	5'-0"	9'-6"	2'-3" (EACH LEAVES)	9'-3"	1-3/4"	WOOD	1	1	—	—	1	1	1	—	WOOD	DETAIL "2" SHEET A-2.10	DETAIL "5" SHEET A-2.10	SEE DETAILS ON SHEET A-2.7, SEE NOTE #11
	8a	4'-5"	8'-3"	2'-0" (EACH LEAVES)	8'-0"	1-3/4"	WOOD	1	1	—	—	—	—	—	—	WOOD	DETAIL "2" SHEET A-2.10	DETAIL "5" SHEET A-2.10	SEE DETAILS ON SHEET A-2.7
	8b	4'-5"	8'-3"	2'-0" (EACH LEAVES)	8'-0"	1-3/4"	WOOD	1	1	—	—	—	—	—	—	WOOD	DETAIL "2" SHEET A-2.10	DETAIL "5" SHEET A-2.10	SEE DETAILS ON SHEET A-2.7
	8c	4'-5"	8'-3"	2'-0" (EACH LEAVES)	8'-0"	1-3/4"	WOOD	1	1	—	—	—	—	—	—	WOOD	DETAIL "2" SHEET A-2.10	DETAIL "5" SHEET A-2.10	SEE DETAILS ON SHEET A-2.7
	8d	4'-5"	8'-3"	2'-0" (EACH LEAVES)	8'-0"	1-3/4"	WOOD	1	1	—	—	—	—	—	—	WOOD	DETAIL "2" SHEET A-2.10	DETAIL "5" SHEET A-2.10	SEE DETAILS ON SHEET A-2.7
	8e	4'-5"	8'-3"	2'-0" (EACH LEAVES)	8'-0"	1-3/4"	WOOD	1	1	—	—	—	—	—	—	WOOD	DETAIL "2" SHEET A-2.10	DETAIL "5" SHEET A-2.10	SEE DETAILS ON SHEET A-2.7
	8f	4'-5"	8'-3"	2'-0" (EACH LEAVES)	8'-0"	1-3/4"	WOOD	1	1	—	—	—	—	—	—	WOOD	DETAIL "2" SHEET A-2.10	DETAIL "5" SHEET A-2.10	SEE DETAILS ON SHEET A-2.7
	8g	4'-5"	8'-3"	2'-0" (EACH LEAVES)	8'-0"	1-3/4"	WOOD	1	1	—	—	—	—	—	—	WOOD	DETAIL "2" SHEET A-2.10	DETAIL "5" SHEET A-2.10	SEE DETAILS ON SHEET A-2.7
	8h	4'-5"	8'-3"	2'-0" (EACH LEAVES)	8'-0"	1-3/4"	WOOD	1	1	—	—	—	—	—	—	WOOD	DETAIL "2" SHEET A-2.10	DETAIL "5" SHEET A-2.10	SEE DETAILS ON SHEET A-2.7
	8i	4'-5"	8'-3"	2'-0" (EACH LEAVES)	8'-0"	1-3/4"	WOOD	1	1	—	—	—	—	—	—	WOOD	DETAIL "2" SHEET A-2.10	DETAIL "5" SHEET A-2.10	SEE DETAILS ON SHEET A-2.7
	8j	4'-5"	8'-3"	2'-0" (EACH LEAVES)	8'-0"	1-3/4"	WOOD	1	1	—	—	—	—	—	—	WOOD	DETAIL "2" SHEET A-2.10	DETAIL "5" SHEET A-2.10	SEE DETAILS ON SHEET A-2.7
	8k	4'-5"	8'-3"	2'-0" (EACH LEAVES)	8'-0"	1-3/4"	WOOD	1	1	—	—	—	—	—	—	WOOD	DETAIL "2" SHEET A-2.10	DETAIL "5" SHEET A-2.10	SEE DETAILS ON SHEET A-2.7
	8l	4'-5"	8'-3"	2'-0" (EACH LEAVES)	8'-0"	1-3/4"	WOOD	1	1	—	—	—	—	—	—	WOOD	DETAIL "2" SHEET A-2.10	DETAIL "5" SHEET A-2.10	SEE DETAILS ON SHEET A-2.7
	8m	4'-5"	8'-3"	2'-0" (EACH LEAVES)	8'-0"	1-3/4"	WOOD	1	1	—	—	—	—	—	—	WOOD	DETAIL "2" SHEET A-2.10	DETAIL "5" SHEET A-2.10	SEE DETAILS ON SHEET A-2.7
	8n	4'-5"	8'-3"	2'-0" (EACH LEAVES)	8'-0"	1-3/4"	WOOD	1	1	—	—	—	—	—	—	WOOD	DETAIL "2" SHEET A-2.10	DETAIL "5" SHEET A-2.10	SEE DETAILS ON SHEET A-2.7
	8o	4'-5"	8'-3"	2'-0" (EACH LEAVES)	8'-0"	1-3/4"	WOOD	1	1	—	—	—	—	—	—	WOOD	DETAIL "2" SHEET A-2.10	DETAIL "5" SHEET A-2.10	SEE DETAILS ON SHEET A-2.7
	8p	4'-5"	8'-3"	2'-0" (EACH LEAVES)	8'-0"	1-3/4"	WOOD	1	1	—	—	—	—	—	—	WOOD	DETAIL "2" SHEET A-2.10	DETAIL "5" SHEET A-2.10	SEE DETAILS ON SHEET A-2.7
	8q	4'-5"	8'-3"	2'-0" (EACH LEAVES)	8'-0"	1-3/4"	WOOD	1	1	—	—	—	—	—	—	WOOD	DETAIL "2" SHEET A-2.10	DETAIL "5" SHEET A-2.10	SEE DETAILS ON SHEET A-2.7
	8r	4'-5"	8'-3"	2'-0" (EACH LEAVES)	8'-0"	1-3/4"	WOOD	1	1	—	—	—	—	—	—	WOOD	DETAIL "2" SHEET A-2.10	DETAIL "5" SHEET A-2.10	SEE DETAILS ON SHEET A-2.7
	8s	4'-5"	8'-3"	2'-0" (EACH LEAVES)	8'-0"	1-3/4"	WOOD	1	1	—	—	—	—	—	—	WOOD	DETAIL "2" SHEET A-2.10	DETAIL "5" SHEET A-2.10	SEE DETAILS ON SHEET A-2.8 (BATHROOMS DOOR W/ FIXED LOUVERS)
	8t	4'-5"	8'-3"	2'-0" (EACH LEAVES)	8'-0"	1-3/4"	WOOD	1	1	—	—	—	—	—	—	WOOD	DETAIL "2" SHEET A-2.10	DETAIL "5" SHEET A-2.10	SEE DETAILS ON SHEET A-2.8 (BATHROOMS DOOR W/ FIXED LOUVERS)

EXISTING DOORS & LOCKING HARDWARE & NEW LOCKING HARDWARE SCHEDULE

LEVEL	MKD	ROUGH OPENING SIZE WIDTH	ROUGH OPENING SIZE HEIGHT	DOORS WIDTH	DOORS HEIGHT	THICK	MAT.	EXISTING VERTICAL LOCKING DEVICES TOP	EXISTING VERTICAL LOCKING DEVICES BOTTOM	EXISTING HORIZONTAL LOCKING DEVICES TOP	EXISTING HORIZONTAL LOCKING DEVICES BOTTOM	NEW VERTICAL LOCKING DEVICES TOP	NEW VERTICAL LOCKING DEVICES BOTTOM	NEW HORIZONTAL LOCKING DEVICES (BARRICADE TYPE) TOP	NEW HORIZONTAL LOCKING DEVICES (BARRICADE TYPE) BOTTOM	FRAME MAT.	FRAME JAMB	FRAME HEAD	REMARKS
THIRD LEVEL	10a	4'-5"	8'-3"	2'-0" (EACH LEAVES)	8'-0"	1-3/4"	WOOD	1	1	—	—	—	—	—	—	WOOD	DETAIL "2" SHEET A-2.10	DETAIL "5" SHEET A-2.10	SEE DETAILS ON SHEET A-2.8
	10b	4'-5"	8'-3"	2'-0" (EACH LEAVES)	8'-0"	1-3/4"	WOOD	1	1	—	—	—	—	—	—	WOOD	DETAIL "2" SHEET A-2.10	DETAIL "5" SHEET A-2.10	SEE DETAILS ON SHEET A-2.8
	10c	4'-5"	8'-3"	2'-0" (EACH LEAVES)	8'-0"	1-3/4"	WOOD	1	1	—	—	—	—	—	—	WOOD	DETAIL "2" SHEET A-2.10	DETAIL "5" SHEET A-2.10	SEE DETAILS ON SHEET A-2.8
	10d	4'-5"	8'-3"	2'-0" (EACH LEAVES)	8'-0"	1-3/4"	WOOD	1	1	—	—	—	—	—	—	WOOD	DETAIL "2" SHEET A-2.10	DETAIL "5" SHEET A-2.10	SEE DETAILS ON SHEET A-2.8
	10e	4'-5"	8'-3"	2'-0" (EACH LEAVES)	8'-0"	1-3/4"	WOOD	1	1	—	—	—	—	—	—	WOOD	DETAIL "2" SHEET A-2.10	DETAIL "5" SHEET A-2.10	SEE DETAILS ON SHEET A-2.8
	10f	4'-5"	8'-3"	2'-0" (EACH LEAVES)	8'-0"	1-3/4"	WOOD	1	1	—	—	—	—	—	—	WOOD	DETAIL "2" SHEET A-2.10	DETAIL "5" SHEET A-2.10	SEE DETAILS ON SHEET A-2.8
	10g	4'-5"	8'-3"	2'-0" (EACH LEAVES)	8'-0"	1-3/4"	WOOD	1	1	—	—	—	—	—	—	WOOD	DETAIL "2" SHEET A-2.10	DETAIL "5" SHEET A-2.10	SEE DETAILS ON SHEET A-2.8
	10h	4'-5"	8'-3"	2'-0" (EACH LEAVES)	8'-0"	1-3/4"	WOOD	1	1	—	—	—	—	—	—	WOOD	DETAIL "2" SHEET A-2.10	DETAIL "5" SHEET A-2.10	SEE DETAILS ON SHEET A-2.8
	10i	4'-5"	8'-3"	2'-0" (EACH LEAVES)	8'-0"	1-3/4"	WOOD	1	1	—	—	—	—	—	—	WOOD	DETAIL "2" SHEET A-2.10	DETAIL "5" SHEET A-2.10	SEE DETAILS ON SHEET A-2.8
	10j	4'-5"	8'-3"	2'-0" (EACH LEAVES)	8'-0"	1-3/4"	WOOD	1	1	—	—	—	—	—	—	WOOD	DETAIL "2" SHEET A-2.10	DETAIL "5" SHEET A-2.10	SEE DETAILS ON SHEET A-2.8
	10k	4'-5"	8'-3"	2'-0" (EACH LEAVES)	8'-0"	1-3/4"	WOOD	1	1	—	—	—	—	—	—	WOOD	DETAIL "2" SHEET A-2.10	DETAIL "5" SHEET A-2.10	SEE DETAILS ON SHEET A-2.8
	10l	4'-5"	8'-3"	2'-0" (EACH LEAVES)	8'-0"	1-3/4"	WOOD	1	1	—	—	—	—	—	—	WOOD	DETAIL "2" SHEET A-2.10	DETAIL "5" SHEET A-2.10	SEE DETAILS ON SHEET A-2.8
	10m	4'-5"	8'-3"	2'-0" (EACH LEAVES)	8'-0"	1-3/4"	WOOD	1	1	—	—	—	—	—	—	WOOD	DETAIL "2" SHEET A-2.10	DETAIL "5" SHEET A-2.10	SEE DETAILS ON SHEET A-2.8
	10n	4'-5"	8'-3"	2'-0" (EACH LEAVES)	8'-0"	1-3/4"	WOOD	1	1	—	—	—	—	—	—	WOOD	DETAIL "2" SHEET A-2.10	DETAIL "5" SHEET A-2.10	SEE DETAILS ON SHEET A-2.8
	10o	4'-5"	8'-3"	2'-0" (EACH LEAVES)	8'-0"	1-3/4"	WOOD	1	1	—	—	—	—	—	—	WOOD	DETAIL "2" SHEET A-2.10	DETAIL "5" SHEET A-2.10	SEE DETAILS ON SHEET A-2.8
	10p	4'-5"	8'-3"	2'-0" (EACH LEAVES)	8'-0"	1-3/4"	WOOD	1	1	—	—	—	—	—	—	WOOD	DETAIL "2" SHEET A-2.10	DETAIL "5" SHEET A-2.10	SEE DETAILS ON SHEET A-2.8
	10q	4'-5"	8'-3"	2'-0" (EACH LEAVES)	8'-0"	1-3/4"	WOOD	1	1	—	—	—	—	—	—	WOOD	DETAIL "2" SHEET A-2.10	DETAIL "5" SHEET A-2.10	SEE DETAILS ON SHEET A-2.8
	10r	4'-5"	8'-3"	2'-0" (EACH LEAVES)	8'-0"	1-3/4"	WOOD	1	1	—	—	—	—	—	—	WOOD	DETAIL "2" SHEET A-2.10	DETAIL "5" SHEET A-2.10	SEE DETAILS ON SHEET A-2.8
	10s	4'-5"	8'-3"	2'-0" (EACH LEAVES)	8'-0"	1-3/4"	WOOD	1	1	—	—	—	—	—	—	WOOD	DETAIL "2" SHEET A-2.10	DETAIL "5" SHEET A-2.10	SEE DETAILS ON SHEET A-2.8 (BATHROOMS DOOR W/ FIXED LOUVERS)
	10t	4'-5"	8'-3"	2'-0" (EACH LEAVES)	8'-0"	1-3/4"	WOOD	1	1	—	—	—	—	—	—	WOOD	DETAIL "2" SHEET A-2.10	DETAIL "5" SHEET A-2.10	SEE DETAILS ON SHEET A-2.8 (BATHROOMS DOOR W/ FIXED LOUVERS)
FOURTH LEVEL	11a	4'-2"	8'-2"	1'-11 1/2" (EACH LEAVES)	8'-0"	1-3/4"	WOOD	2	2	—	—	—	—	—	—	WOOD	DETAIL "2" SHEET A-2.10	DETAIL "5" SHEET A-2.10	SEE DETAILS ON SHEET A-2.9, SEE NOTE #11
	11b	4'-2"	8'-2"	1'-11 1/2" (EACH LEAVES)	8'-0"	1-3/4"	WOOD	2	2	—	—	—	—	—	—	WOOD	DETAIL "2" SHEET A-2.10	DETAIL "5" SHEET A-2.10	SEE DETAILS ON SHEET A-2.9, SEE NOTE #11
	11c	4'-2"	8'-2"	1'-11 1/2" (EACH LEAVES)	8'-0"	1-3/4"	WOOD	2	2	—	—	—	—	—	—	WOOD	DETAIL "2" SHEET A-2.10	DETAIL "5" SHEET A-2.10	SEE DETAILS ON SHEET A-2.9, SEE NOTE #11
	11d	4'-2"	8'-2"	1'-11 1/2" (EACH LEAVES)	8'-0"	1-3/4"	WOOD	2	2	—	—	—	—	—	—	WOOD	DETAIL "2" SHEET A-2.10	DETAIL "5" SHEET A-2.10	SEE DETAILS ON SHEET A-2.9, SEE NOTE #11
ROOF LEVEL	12a	3'-2"	7'-2"	2'-10"	7'-0"	1-3/4"	METAL	—	—	—	—	—	—	1	1	METAL	DETAIL "2" SHEET A-2.10	DETAIL "5" SHEET A-2.10	SEE DETAILS ON SHEET A-2.9, SEE NOTE #12
	12b	3'-2"	7'-2"	2'-10"	7'-0"	1-3/4"	METAL	—	—	—	—	—	—	1	1	METAL	DETAIL "2" SHEET A-2.10	DETAIL "5" SHEET A-2.10	SEE DETAILS ON SHEET A-2.9, SEE NOTE #12

IMPORTANT NOTES ABOUT DOORS DETAILS IN THIS PROJECT

1. ALL DOORS ELEVATIONS AND SECTIONS ARE FOR REFERENCE. CONTRACTOR SHALL VERIFY EACH DOOR DIMENSIONS INCLUDING MOLDINGS, FRAMES AND DOOR LEAVES IN ORDER TO COORDINATE THE PROPER INSTALLATION OF THE PROPOSED LOCKING HARDWARE AND WEATHERSTRIP COMPONENTS.

2. CONTRACTOR SHALL SUPPLY SHOP DRAWINGS FOR THE INSTALLATION OF EACH LOCKING HARDWARE AND WEATHER STRIP COMPONENTS.

3. DOORS SHALL BE REPAIRED AND OR ALIGNED (IF NEEDED) AND FINISHED IN ORDER TO MAINTAIN THE PROPER OPERATION OF LOCKING HARDWARE (EXISTING & PROPOSED), PROPER SEAL OF THE WEATHERSTRIP MATERIAL AND GOOD AESTHETIC AFTER THE INSTALLATION OF LOCKING HARDWARE AND WEATHERSTRIP MATERIAL.

4. PAINT OF DOORS THAT HAVE TO BE PAINTED (IF NEEDED) WILL BE SELECTED BY ARCHITECT / ENGINEER.

5. DOORS GAPS BETWEEN LEAVES AND/OR FRAME MAY VARIES, CONTRACTOR SHALL VERIFY EACH DOOR IN ORDER TO MAKE SURE THAT WEATHERSTRIP MATERIAL WILL COVER THAT GAP BETWEEN DOORS LEAVES AND OR FRAME AND PROPERLY SEAL THE GAP.

6. CONTRACTOR SHALL SUBMITT SHOP DRAWINGS OF THE PROPER INSTALLATIONS AND OR FABRICATIONS.

7. CONTRACTOR SHALL INSTALL ALL WEATHERSTRIPS AND LOCKING DEVICES AS PER MANUFACTURER INSTRUCTION AND OR RECOMMENDATIONS.

8. CONTRACTOR SHALL TEST THE WEATHERSTRIP MATERIAL ADHESION IN A SMALL AREA IN DOOR AND FRAMES BEFORE PROCEEDING ENTIRELY. CONTRACTOR IS RESPONSIBLE FOR BE SURE THAT THE SURFACE IS SMOOTH AND PREPARE SURFACE IF NECESSARY AS REQUIRED BY MANUFACTURER SPECIFICATIONS.

9. CONTRACTOR SHALL VERIFY THAT DOORS PROPERLY OPERATES (CLOSE, OPEN PROPERLY) INCLUDING ALL LOCKING DEVICES, AFTER WEATHERSTRIP AND LOCKING DEVICES INSTALLATIONS.

10. CONTRACTOR SHALL VISIT THE BUILDING TO GET FAMILIARIZED WITH THE ENTIRE SCOPE OF WORK.

11. HORIZONTAL LOCKING DEVICE (LATCH TYPE) AT CENTER OF LEAVES AS PER FEMA REPORT IS NOT CONSIDERED BY DESIGNER DUE TO LACK OF SPACE DUE TO MOLDINGS AT LEAVES.

12. NEW L-SHAPPED STRIKE HORIZONTAL LOCKING DEVICE, SEE DETAILS ON SHEET A-2.12.

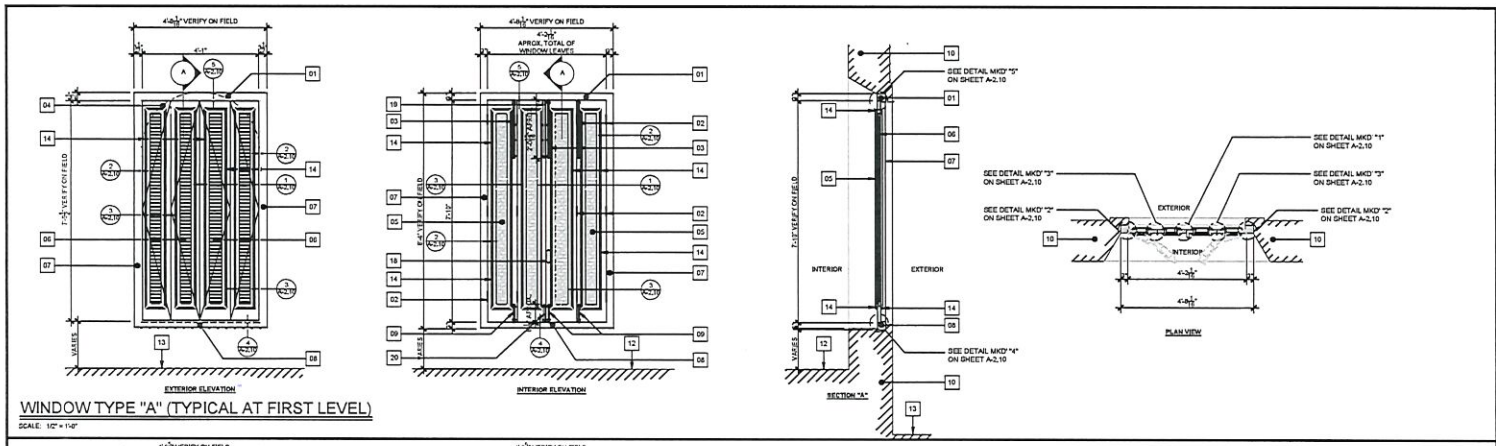

WINDOW TYPE "A" (TYPICAL AT FIRST LEVEL)

SCALE: 1/2" = 1'-0"

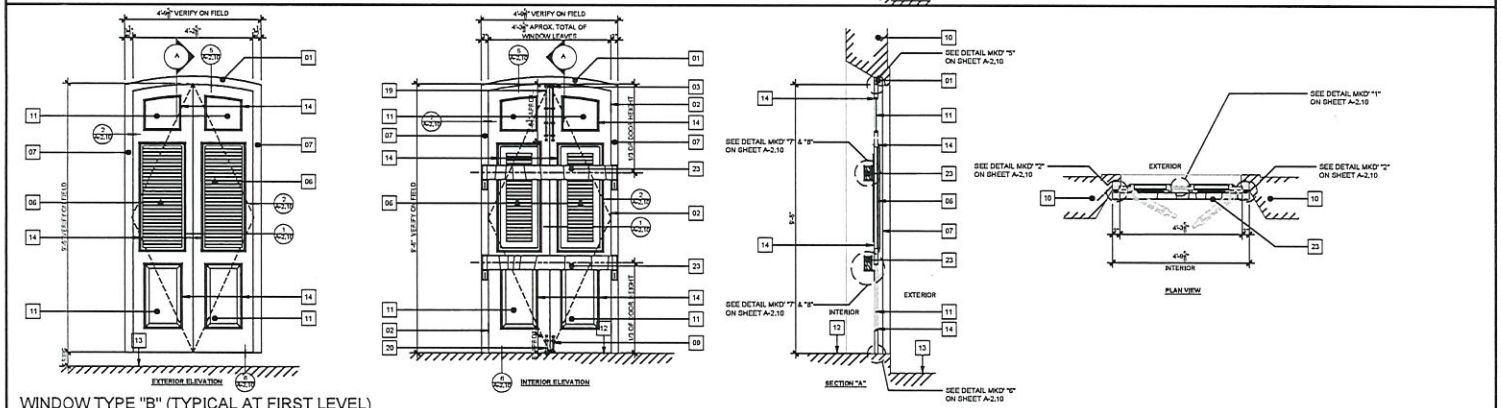

WINDOW TYPE "B" (TYPICAL AT FIRST LEVEL)

SCALE: 1/2" = 1'-0"

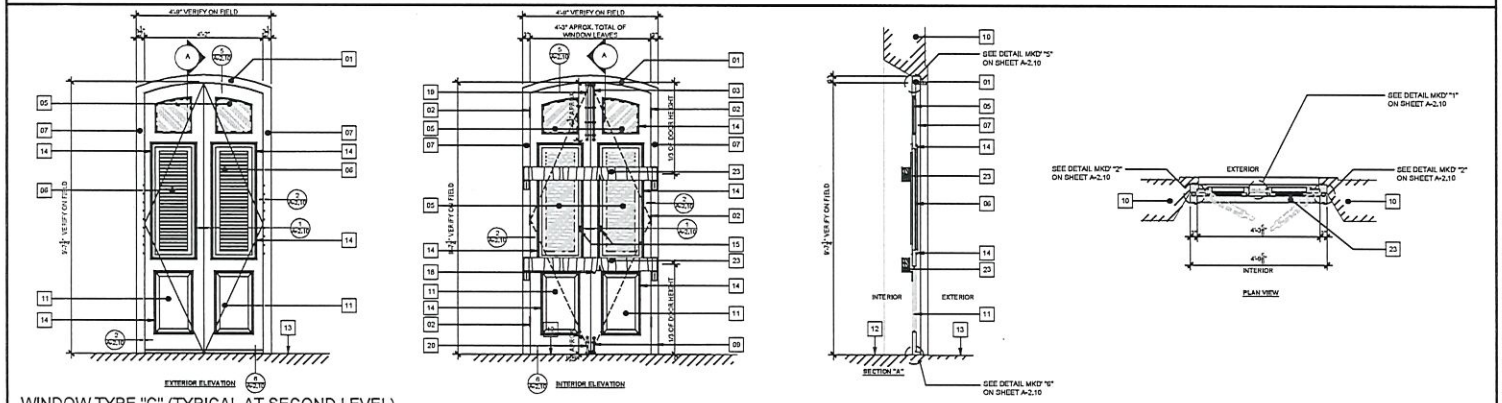

WINDOW TYPE "C" (TYPICAL AT SECOND LEVEL)

SCALE: 1/2" = 1'-0"

WINDOWS KEY NOTES:

01 EXISTING TOP WINDOW WOOD FRAME TO REMAIN.
02 EXISTING WINDOW HINGES TO REMAIN (TYPICAL).
03 EXISTING TOP VINTAGE DUTCH BOLT SURFACE LOCKING DEVICE TO REMAIN (TYPICAL).
04 EXISTING MASONRY ARCH AT EXTERIOR.
05 EXISTING FIXED GLASS TO REMAIN.
06 EXISTING WINDOW WOOD JALOUSIE TO REMAIN.
07 EXISTING SIDE WINDOW WOOD FRAME TO REMAIN.
08 EXISTING BOTTOM WINDOW WOOD FRAME TO REMAIN.
09 EXISTING BOTTOM VINTAGE DUTCH BOLT SURFACE MOUNTED LOCKING DEVICE TO REMAIN (TYPICAL).
10 EXISTING MASONRY WALL TO REMAIN.
11 EXISTING WOOD FIXED PANEL TO REMAIN.
12 EXISTING INTERIOR FLOOR FINISH TO REMAIN.
13 EXISTING EXTERIOR FLOOR FINISH TO REMAIN.
14 EXISTING WOOD MOLDING TO REMAIN (TYPICAL).
15 EXISTING WOOD JALOUSIE OPERATOR TO REMAIN (TYPICAL).
16 EXISTING TOP WOOD DOOR MANUAL FLUSHBOLT VERTICAL LOCKING DEVICE TO REMAIN.
17 EXISTING BOTTOM WOOD DOOR MANUAL FLUSHBOLT VERTICAL LOCKING DEVICE TO REMAIN.
18 EXISTING WINDOW HANDLE TO REMAIN.
19 NEW TOP VINTAGE DUTCH BOLT SURFACE LOCKING DEVICE TO REMAIN (TYPICAL).
20 NEW BOTTOM VINTAGE DUTCH BOLT SURFACE MOUNTED LOCKING DEVICE TO REMAIN (TYPICAL).
21 NEW TOP WOOD DOOR MANUAL FLUSHBOLT VERTICAL LOCKING DEVICE TO REMAIN.
22 NEW BOTTOM WOOD DOOR MANUAL FLUSHBOLT VERTICAL LOCKING DEVICE TO REMAIN, SEE DETAILS
23 NEW WOODEN HORIZONTAL LOCKING DEVICE (BARRICADE TYPE). SEE DETAILS ON SHEET A-2.10.

IMPORTANT NOTES ABOUT WINDOWS IN THIS PROJECT

1. ALL WINDOWS DIMENSIONS IN ELEVATIONS AND SECTIONS ARE FOR REFERENCE. CONTRACTOR SHALL VERIFY EACH WINDOWS DIMENSIONS INCLUDING MOLDINGS, FRAMES AND DOOR LEAVES IN ORDER TO COORDINATE THE PROPER INSTALLATION OF THE PROPOSED LOCKING HARDWARE AND WEATHERSTRIP COMPONENTS.
2. CONTRACTOR SHALL SUPPLY SHOP DRAWINGS FOR THE INSTALLATION OF EACH LOCKING HARDWARE AND WEATHER STRIP COMPONENTS.
3. WINDOWS SHALL BE REPAIRED (IF NEEDED) AND FINISHED IN ORDER TO MAINTAIN THE PROPER OPERATION OF LOCKING HARDWARE (EXISTING & PROPOSED), PROPER OPERATION OF THE WEATHERSTRIP MATERIAL AND GOOD AESTHETIC AFTER THE INSTALLATION OF LOCKING HARDWARE AND WEATHERSTRIP MATERIAL.
4. PAINT OF WINDOWS THAT HAVE TO BE PAINTED (IF NEEDED) WILL BE SELECTED BY ARCHITECT / ENGINEER.
5. SEE IMPORTANT NOTES ABOUT DOORS AND WINDOWS DETAILS ON SHEETS A-2.10 & A-2.11.
6. FOR LOCKING DEVICES QUANTITIES OF EACH WINDOWS REFER TO SHEET A-2.0a.

ENGINEERED ADVANTAGE, PSC
P.O. BOX 6025
San Juan, Puerto Rico 00914
p. 787-756-6032 email:pvagnetti@eapsc.net

PROJECT: CONSTRUCTION FOR HAZARD MITIGATION FOR STATE DEPARTMENT BUILDING

ADDRESS: SAN JOSE STREET SAN JUAN, PUERTO RICO

OWNER:

SEAL:

DRAWN BY:	D. LUGO
REVIEWED:	P. J. VAGNETTI
DATE:	2021-09-09
PROJECT NO:	20-720

NO.	REVISION	DATE

SHEET TITLE:

EXISTING WINDOWS ELEVATIONS W/ PROPOSED LOCKING HARDWARE

PAGE NUMBER

A-2.1

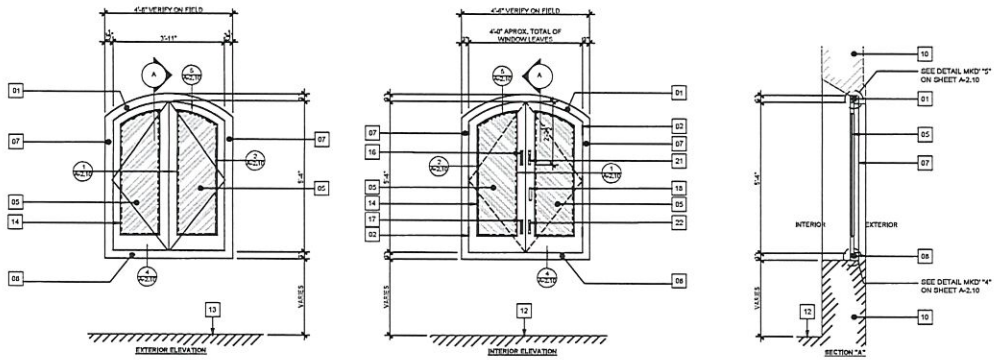

WINDOW TYPE "D" (TYPICAL AT SECOND LEVEL)

SCALE: 1/2" = 1'-0"

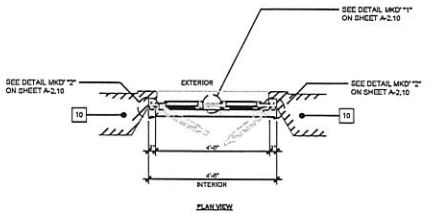

NOTES

1. EXISTING WINDOW DETERIORATED.
2. DESIGNER SUGGEST REPLACE THIS TYPE OF WINDOWS.
3. CONTRACTOR SHALL CONSIDER THE REPLACEMENT OF THIS WINDOW
4. CONTRACTOR SHALL PROVIDE SHOP DRAWING OF FABRICATION & INSTALLATION.

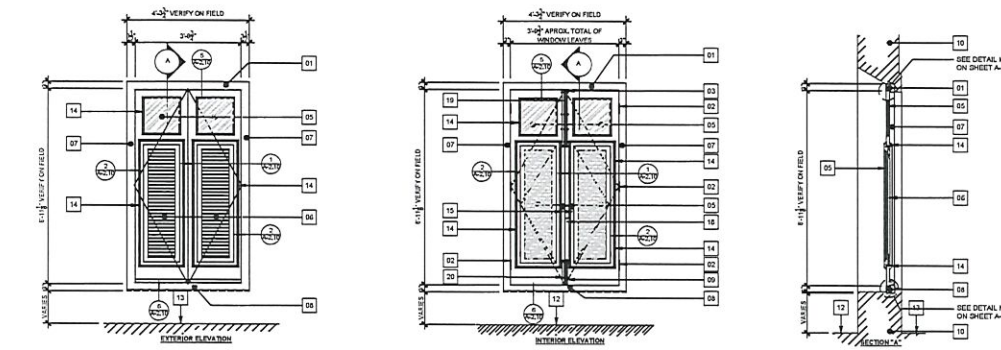

WINDOW TYPE "E" (TYPICAL AT THIRD LEVEL)

SCALE: 1/2" = 1'-0"

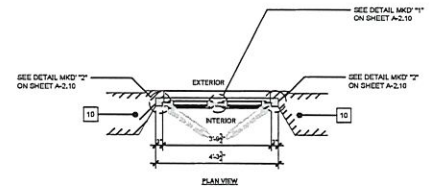

*TOTAL DOOR THICK: 1-3/4" APROX.

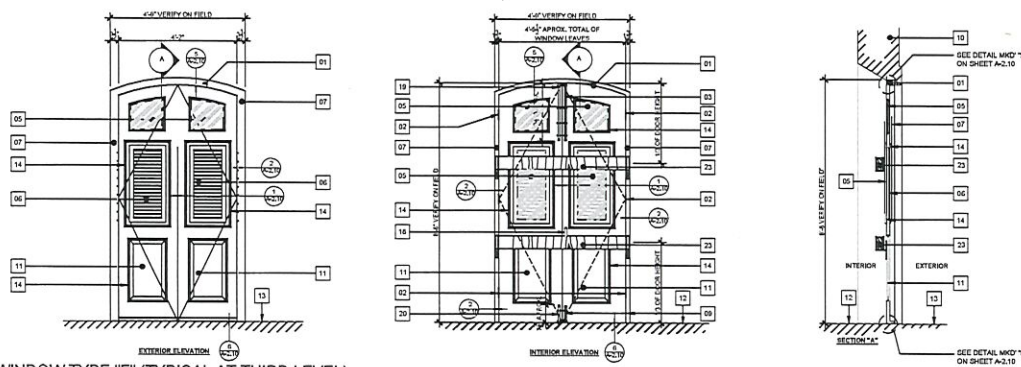

WINDOW TYPE "F" (TYPICAL AT THIRD LEVEL)

SCALE: 1/2" = 1'-0"

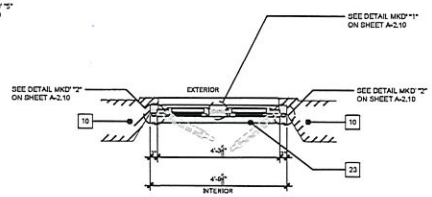

WINDOWS KEY NOTES:

01 EXISTING TOP WINDOW WOOD FRAME TO REMAIN.
02 EXISTING WINDOW HINGES TO REMAIN (TYPICAL).
03 EXISTING TOP VINTAGE DUTCH BOLT SURFACE LOCKING DEVICE TO REMAIN (TYPICAL).
04 EXISTING MASONRY ARCH AT EXTERIOR.
05 EXISTING FIXED GLASS TO REMAIN.
06 EXISTING WINDOW WOOD JALOUSIE TO REMAIN.
07 EXISTING SIDE WINDOW WOOD FRAME TO REMAIN.
08 EXISTING BOTTOM WINDOW WOOD FRAME TO REMAIN.
09 EXISTING BOTTOM VINTAGE DUTCH BOLT SURFACE MOUNTED LOCKING DEVICE TO REMAIN (TYPICAL).
10 EXISTING MASONRY WALL TO REMAIN.
11 EXISTING WOOD FIXED PANEL TO REMAIN.
12 EXISTING INTERIOR FLOOR FINISH TO REMAIN.
13 EXISTING EXTERIOR FLOOR FINISH TO REMAIN.
14 EXISTING WOOD MOLDING TO REMAIN (TYPICAL).
15 EXISTING WOOD JALOUSIE OPERATOR TO REMAIN.
16 EXISTING TOP WOOD DOOR MANUAL FLUSHBOLT VERTICAL LOCKING DEVICE TO REMAIN.
17 EXISTING BOTTOM WOOD DOOR MANUAL FLUSHBOLT VERTICAL LOCKING DEVICE TO REMAIN.
18 EXISTING WINDOW HANDLE TO REMAIN.
19 NEW TOP VINTAGE DUTCH BOLT SURFACE LOCKING DEVICE TO REMAIN (TYPICAL).
20 NEW BOTTOM VINTAGE DUTCH BOLT SURFACE MOUNTED LOCKING DEVICE TO REMAIN (TYPICAL).
21 NEW TOP WOOD DOOR MANUAL FLUSHBOLT VERTICAL LOCKING DEVICE TO REMAIN.
22 NEW BOTTOM WOOD DOOR MANUAL FLUSHBOLT VERTICAL LOCKING DEVICE TO REMAIN.
23 NEW WOODEN HORIZONTAL LOCKING DEVICE (BARRICADE TYPE). SEE DETAILS ON SHEET A-2.10

IMPORTANT NOTES ABOUT WINDOWS IN THIS PROJECT

1. ALL WINDOWS DIMENSIONS IN ELEVATIONS AND SECTIONS ARE FOR REFERENCE. CONTRACTOR SHALL VERIFY EACH WINDOWS DIMENSIONS INCLUDING MOLDINGS, FRAMES AND DOOR LEAVES IN ORDER TO COORDINATE THE PROPER INSTALLATION OF THE PROPOSED LOCKING HARDWARE AND WEATHERSTRIP COMPONENTS.
2. CONTRACTOR SHALL SUPPLY SHOP DRAWINGS FOR THE INSTALLATION OF EACH LOCKING HARDWARE AND WEATHER STRIP COMPONENTS.
3. WINDOWS SHALL BE REPAIRED (IF NEEDED) AND FINISHED IN ORDER TO MAINTAIN THE PROPER OPERATION OF LOCKING HARDWARE (EXISTING & PROPOSED), PROPER OPERATION OF THE WEATHERSTRIP MATERIAL AND GOOD AESTHETIC AFTER THE INSTALLATION OF LOCKING HARDWARE AND WEATHERSTRIP MATERIAL.
4. PAINT OF WINDOWS THAT HAVE TO BE PAINTED (IF NEEDED) WILL BE SELECTED BY ARCHITECT / ENGINEER.
5. SEE IMPORTANT NOTES ABOUT DOORS AND WINDOWS DETAILS ON SHEETS A-2.10 & A-2.11.
6. FOR LOCKING DEVICES QUANTITIES OF EACH WINDOWS REFER TO SHEET A-2.0a.

ENGINEERED ADVANTAGE, PSC
P.O. BOX 6025
San Juan, Puerto Rico 00914
p. 787-756-6032 email:pjvagnetti@eapsc.net

PROJECT: CONSTRUCTION FOR HAZARD MITIGATION FOR STATE DEPARTMENT BUILDING

ADDRESS: SAN JOSE STREET SAN JUAN, PUERTO RICO

OWNER:

SEAL:

DRAWN BY:	D. LUGO
REVIEWED:	P. J. VAGNETTI
DATE:	2021-09-09
PROJECT NO:	20-720

NO.	REVISION	DATE

SHEET TITLE:

EXISTING WINDOWS ELEVATIONS W/ PROPOSED LOCKING HARDWARE

PAGE NUMBER

A-2.2

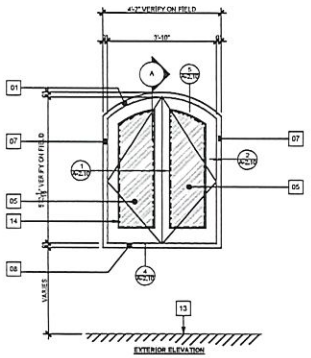

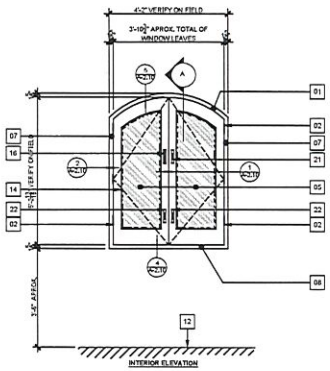

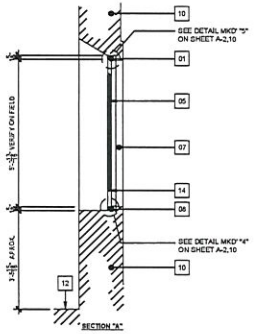

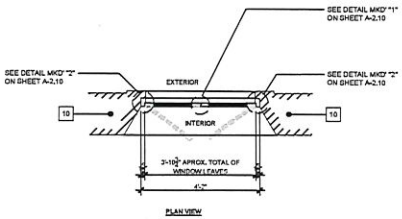

WINDOW TYPE "G" (TYPICAL AT THIRD LEVEL)

SCALE: 1/2" = 1'-0"

NOTES

1. EXISTING WINDOW DETERIORATED.
2. DESIGNER SUGGEST REPLACE THIS TYPE OF WINDOWS.
3. CONTRACTOR SHALL CONSIDER THE REPLACEMENT OF THIS WINDOW
4. CONTRACTOR SHALL PROVIDE SHOP DRAWING OF FABRICATION & INSTALLATION.

WINDOWS KEY NOTES:

01 EXISTING TOP WINDOW WOOD FRAME TO REMAIN.
02 EXISTING WINDOW HINGES TO REMAIN (TYPICAL).
03 EXISTING TOP VINTAGE DUTCH BOLT SURFACE LOCKING DEVICE TO REMAIN (TYPICAL).
04 EXISTING MASONRY ARCH AT EXTERIOR.
05 EXISTING FIXED GLASS TO REMAIN.
06 EXISTING WINDOW WOOD JALOUSIE TO REMAIN.
07 EXISTING SIDE WINDOW WOOD FRAME TO REMAIN.
08 EXISTING BOTTOM WINDOW WOOD FRAME TO REMAIN.
09 EXISTING BOTTOM VINTAGE DUTCH BOLT SURFACE MOUNTED LOCKING DEVICE TO REMAIN (TYPICAL).
10 EXISTING MASONRY WALL TO REMAIN.
11 EXISTING WOOD FIXED PANEL TO REMAIN.
12 EXISTING INTERIOR FLOOR FINISH TO REMAIN.
13 EXISTING EXTERIOR FLOOR FINISH TO REMAIN.
14 EXISTING WOOD MOLDING TO REMAIN (TYPICAL).
15 EXISTING WOOD JALOUSIE OPERATOR TO REMAIN.
16 EXISTING TOP WOOD DOOR MANUAL FLUSHBOLT VERTICAL LOCKING DEVICE TO REMAIN.
17 EXISTING BOTTOM WOOD DOOR MANUAL FLUSHBOLT VERTICAL LOCKING DEVICE TO REMAIN.
18 EXISTING WINDOW HANDLE TO REMAIN.
19 NEW TOP VINTAGE DUTCH BOLT SURFACE LOCKING DEVICE TO REMAIN (TYPICAL).
20 NEW BOTTOM VINTAGE DUTCH BOLT SURFACE MOUNTED LOCKING DEVICE TO REMAIN (TYPICAL).
21 NEW TOP WOOD DOOR MANUAL FLUSHBOLT VERTICAL LOCKING DEVICE TO REMAIN.
22 NEW BOTTOM WOOD DOOR MANUAL FLUSHBOLT VERTICAL LOCKING DEVICE TO REMAIN.
23 NEW WOODEN HORIZONTAL LOCKING DEVICE (BARRICADE TYPE).

IMPORTANT NOTES ABOUT WINDOWS IN THIS PROJECT

1. ALL WINDOWS DIMENSIONS IN ELEVATIONS AND SECTIONS ARE FOR REFERENCE. CONTRACTOR SHALL VERIFY EACH WINDOWS DIMENSIONS INCLUDING MOLDINGS, FRAMES AND DOOR LEAVES IN ORDER TO COORDINATE THE PROPER INSTALLATION OF THE PROPOSED LOCKING HARDWARE AND WEATHERSTRIP COMPONENTS.

2. CONTRACTOR SHALL SUPPLY SHOP DRAWINGS FOR THE INSTALLATION OF EACH LOCKING HARDWARE AND WEATHER STRIP COMPONENTS.

3. WINDOWS SHALL BE REPAIRED (IF NEEDED) AND FINISHED IN ORDER TO MAINTAIN THE PROPER OPERATION OF LOCKING HARDWARE (EXISTING & PROPOSED), PROPER OPERATION OF THE WEATHERSTRIP MATERIAL AND GOOD AESTHETIC AFTER THE INSTALLATION OF LOCKING HARDWARE AND WEATHERSTRIP MATERIAL.

4. PAINT OF WINDOWS THAT HAVE TO BE PAINTED (IF NEEDED) WILL BE SELECTED BY ARCHITECT / ENGINEER.

5. SEE IMPORTANT NOTES ABOUT DOORS AND WINDOWS DETAILS ON SHEETS A-2.10 & A-2.11.

6. FOR LOCKING DEVICES QUANTITIES OF EACH WINDOWS REFER TO SHEET A-2.0a.

ENGINEERED ADVANTAGE, PSC
P.O. BOX 6026
San Juan, Puerto Rico 00914
p. 787-756-6032 email:pjvagnetti@eapsc.net

PROJECT
CONSTRUCTION FOR
HAZARD MITIGATION FOR STATE DEPARTMENT BUILDING

ADDRESS
SAN JOSE STREET
SAN JUAN, PUERTO RICO

OWNER:

SEAL:

DRAWN BY:	D. LUGO
REVIEWED BY:	P. J. VAGNETTI
DATE:	2021-09-09
PROJECT NO:	20-720

NO.	REVISION	DATE

SHEET TITLE:

EXISTING WINDOWS ELEVATIONS W/ PROPOSED LOCKING HARDWARE

PAGE NUMBER

A-2.3

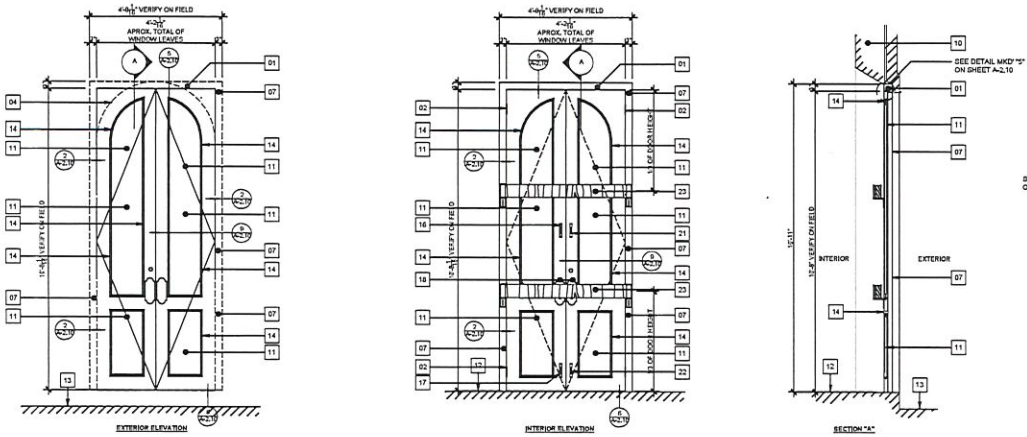

DOOR TYPE "1" (TYPICAL AT FIRST LEVEL)

SCALE: 1/2" = 1'-0"

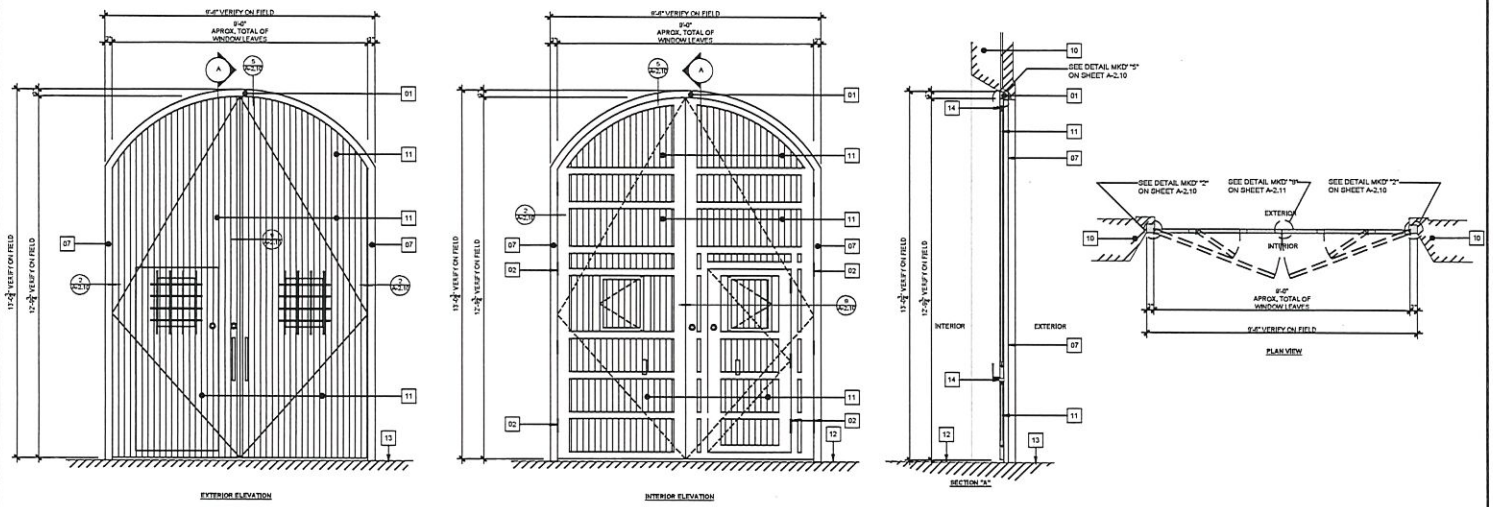

DOOR TYPE "2" (TYPICAL AT FIRST LEVEL)

SCALE: 1/2" = 1'-0"

DOORS KEY NOTES:

01 EXISTING TOP DOOR WOOD FRAME TO REMAIN.
02 EXISTING DOOR HINGES TO REMAIN (TYPICAL).
03 EXISTING TOP VINTAGE DUTCH BOLT SURFACE LOCKING DEVICE TO REMAIN (TYPICAL).
04 EXISTING MASONRY ARCH AT EXTERIOR.
05 EXISTING FIXED GLASS TO REMAIN.
06 EXISTING WINDOW WOOD JALOUSIE TO REMAIN.
07 EXISTING SIDE DOOR WOOD FRAME TO REMAIN.
08 EXISTING BOTTOM WINDOW WOOD FRAME TO REMAIN.
09 EXISTING BOTTOM VINTAGE DUTCH BOLT SURFACE MOUNTED LOCKING DEVICE TO REMAIN (TYPICAL).
10 EXISTING MASONRY WALL TO REMAIN.
11 EXISTING WOOD FIXED PANEL TO REMAIN.
12 EXISTING INTERIOR FLOOR FINISH TO REMAIN.
13 EXISTING EXTERIOR FLOOR FINISH TO REMAIN.
14 EXISTING WOOD MOLDING TO REMAIN (TYPICAL).
15 EXISTING WOOD JALOUSIE OPERATOR TO REMAIN (TYPICAL).
16 EXISTING TOP WOOD DOOR MANUAL FLUSHBOLT VERTICAL LOCKING DEVICE TO REMAIN.
17 EXISTING BOTTOM WOOD DOOR MANUAL FLUSHBOLT VERTICAL LOCKING DEVICE TO REMAIN.
18 EXISTING DOOR HANDLE TO REMAIN.
19 NEW TOP VINTAGE DUTCH BOLT SURFACE LOCKING DEVICE TO REMAIN (TYPICAL).
20 NEW BOTTOM VINTAGE DUTCH BOLT SURFACE MOUNTED LOCKING DEVICE TO REMAIN (TYPICAL).
21 NEW TOP WOOD DOOR MANUAL FLUSHBOLT VERTICAL LOCKING DEVICE TO REMAIN.
22 NEW BOTTOM WOOD DOOR MANUAL FLUSHBOLT VERTICAL LOCKING DEVICE TO REMAIN, SEE DETAILS
23 NEW WOODEN HORIZONTAL LOCKING DEVICE (BARRICADE TYPE). SEE DETAILS ON SHEET A-2.10

IMPORTANT NOTES ABOUT DOORS IN THIS PROJECT

1. ALL DOORS DIMENSIONS IN ELEVATIONS AND SECTIONS ARE FOR REFERENCE. CONTRACTOR SHALL VERIFY EACH DOORS DIMENSIONS INCLUDING MOLDINGS, FRAMES AND DOOR LEAVES IN ORDER TO COORDINATE THE PROPER INSTALLATION OF THE PROPOSED LOCKING HARDWARE AND WEATHERSTRIP COMPONENTS.

2. CONTRACTOR SHALL SUPPLY SHOP DRAWINGS FOR THE INSTALLATION OF EACH LOCKING HARDWARE AND WEATHER STRIP COMPONENTS.

3. DOORS SHALL BE REPAIRED (IF NEEDED) AND FINISHED IN ORDER TO MAINTAIN THE PROPER OPERATION OF LOCKING HARDWARE (EXISTING & PROPOSED), PROPER OPERATION OF THE WEATHERSTRIP MATERIAL AND GOOD AESTHETIC AFTER THE INSTALLATION OF LOCKING HARDWARE AND WEATHERSTRIP MATERIAL.

4. PAINT OF DOORS THAT HAVE TO BE PAINTED (IF NEEDED) WILL BE SELECTED BY ARCHITECT / ENGINEER.

5. SEE IMPORTANT NOTES ABOUT DOORS AND WINDOWS DETAILS ON SHEETS A-2.10 & A-2.11.

6. FOR LOCKING DEVICES QUANTITIES OF EACH DOORS REFER TO SHEET A-2.0b.

ENGINEERED ADVANTAGE, PSC
P.O. BOX 5025
San Juan, Puerto Rico 00914
p. 787-756-6032 email.pjvagnetti@eapsc.net

PROJECT: CONSTRUCTION FOR HAZARD MITIGATION FOR STATE DEPARTMENT BUILDING

ADDRESS: SAN JOSE STREET SAN JUAN, PUERTO RICO

OWNER:

SEAL:

DRAWN BY:	D. LUGO
REVIEWED:	P. J. VAGNETTI
DATE:	2021-09-09
PROJECT NO:	20-720

NO.	REVISION	DATE

SHEET TITLE:

EXISTING DOORS ELEVATIONS W/ PROPOSED LOCKING HARDWARE

PAGE NUMBER

A-2.4

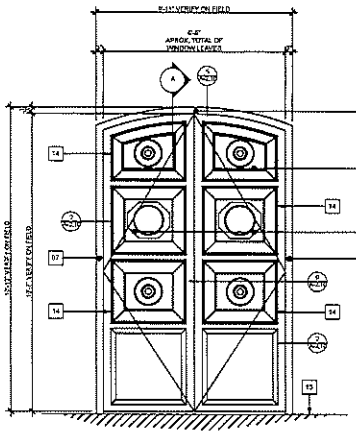

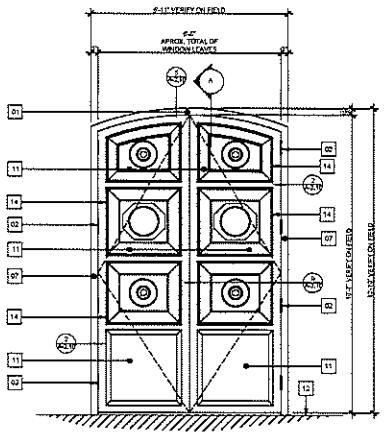

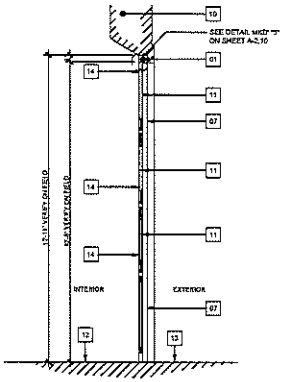

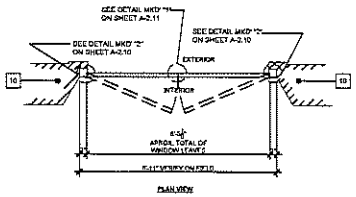

DOOR TYPE "3" (TYPICAL AT FIRST LEVEL)

SCALE: 1/2" = 1'-0"

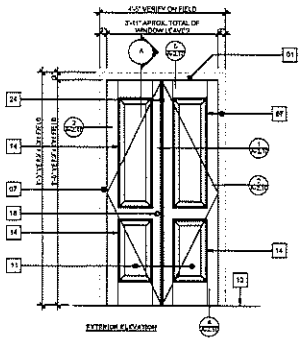

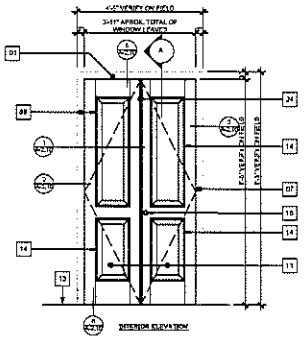

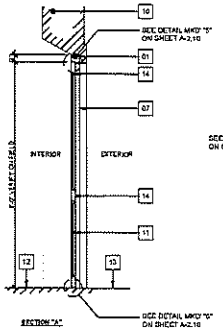

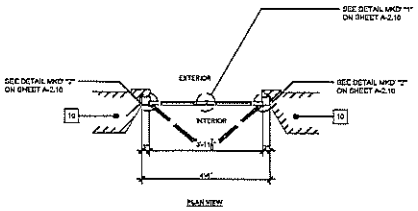

DOOR TYPE "4" (TYPICAL AT FIRST LEVEL-4a TO 4o)

SCALE: 1/2" = 1'-0"

DOORS KEY NOTES:

01 EXISTING TOP DOOR WOOD FRAME TO REMAIN.
02 EXISTING DOOR HINGES TO REMAIN (TYPICAL).
03 EXISTING TOP VINTAGE DUTCH BOLT SURFACE LOCKING DEVICE TO REMAIN (TYPICAL).
04 EXISTING MASONRY ARCH AT EXTERIOR.
05 EXISTING FIXED GLASS TO REMAIN.
06 EXISTING WINDOW WOOD JALOUSIE TO REMAIN.
07 EXISTING SIDE DOOR WOOD FRAME TO REMAIN.
08 EXISTING BOTTOM WINDOW WOOD FRAME TO REMAIN.
09 EXISTING BOTTOM VINTAGE DUTCH BOLT SURFACE MOUNTED LOCKING DEVICE TO REMAIN (TYPICAL).
10 EXISTING MASONRY WALL TO REMAIN.
11 EXISTING WOOD FIXED PANEL TO REMAIN.
12 EXISTING INTERIOR FLOOR FINISH TO REMAIN.
13 EXISTING EXTERIOR FLOOR FINISH TO REMAIN.
14 EXISTING WOOD MOLDING TO REMAIN (TYPICAL).
15 EXISTING WOOD JALOUSIE OPERATOR TO REMAIN (TYPICAL).
16 EXISTING TOP WOOD DOOR MANUAL FLUSHBOLT VERTICAL LOCKING DEVICE TO REMAIN.
17 EXISTING BOTTOM WOOD DOOR MANUAL FLUSHBOLT VERTICAL LOCKING DEVICE TO REMAIN.
18 EXISTING DOOR HANDLE TO REMAIN.
19 NEW TOP VINTAGE DUTCH BOLT SURFACE LOCKING DEVICE TO REMAIN (TYPICAL).
20 NEW BOTTOM VINTAGE DUTCH BOLT SURFACE MOUNTED LOCKING DEVICE TO REMAIN (TYPICAL).
21 NEW TOP WOOD DOOR MANUAL FLUSHBOLT VERTICAL LOCKING DEVICE TO REMAIN.
22 NEW BOTTOM WOOD DOOR MANUAL FLUSHBOLT VERTICAL LOCKING DEVICE TO REMAIN. SEE DETAILS
23 NEW WOODEN HORIZONTAL LOCKING DEVICE (BARRICADE TYPE).
24 EXISTING ASTRAGAL TO REMAIN.

IMPORTANT NOTES ABOUT DOORS IN THIS PROJECT

1. ALL DOORS DIMENSIONS IN ELEVATIONS AND SECTIONS ARE FOR REFERENCE. CONTRACTOR SHALL VERIFY EACH DOORS DIMENSIONS INCLUDING MOLDINGS, FRAMES AND DOOR LEAVES IN ORDER TO COORDINATE THE PROPER INSTALLATION OF THE PROPOSED LOCKING HARDWARE AND WEATHERSTRIP COMPONENTS.

2. CONTRACTOR SHALL SUPPLY SHOP DRAWINGS FOR THE INSTALLATION OF EACH LOCKING HARDWARE AND WEATHER STRIP COMPONENTS.

3. DOORS SHALL BE REPAIRED (IF NEEDED) AND FINISHED IN ORDER TO MAINTAIN THE PROPER OPERATION OF LOCKING HARDWARE (EXISTING & PROPOSED), PROPER OPERATION OF THE WEATHERSTRIP MATERIAL AND GOOD AESTHETIC AFTER THE INSTALLATION OF LOCKING HARDWARE AND WEATHERSTRIP MATERIAL.

4. PAINT OF DOORS THAT HAVE TO BE PAINTED (IF NEEDED) WILL BE SELECTED BY ARCHITECT / ENGINEER.

5. SEE IMPORTANT NOTES ABOUT DOORS AND WINDOWS DETAILS ON SHEETS A-2.10 & A-2.11.

6. FOR LOCKING DEVICES QUANTITIES OF EACH DOORS REFER TO SHEET A-2.0b.

ENGINEERED ADVANTAGE, PSC
P.O. BOX 9005
San Juan, Puerto Rico 00914
p. 787-756-0332 email: pvagnetti@msn.net

PROJECT: CONSTRUCTION FOR
HAZARD MITIGATION FOR STATE DEPARTMENT BUILDING

ADDRESS: SAN JOSE STREET
SAN JUAN, PUERTO RICO

OWNER:

GEAL:

DRAWN BY:	D. LUGO
REVIEWED BY:	P. J. VAGNETTI
DATE:	2022-05-20
PROJECT NO:	20-720

NO.	REVISION	DATE

SHEET TITLE:

EXISTING DOORS ELEVATIONS W/ PROPOSED LOCKING HARDWARE

PAGE NUMBER

A-2.5

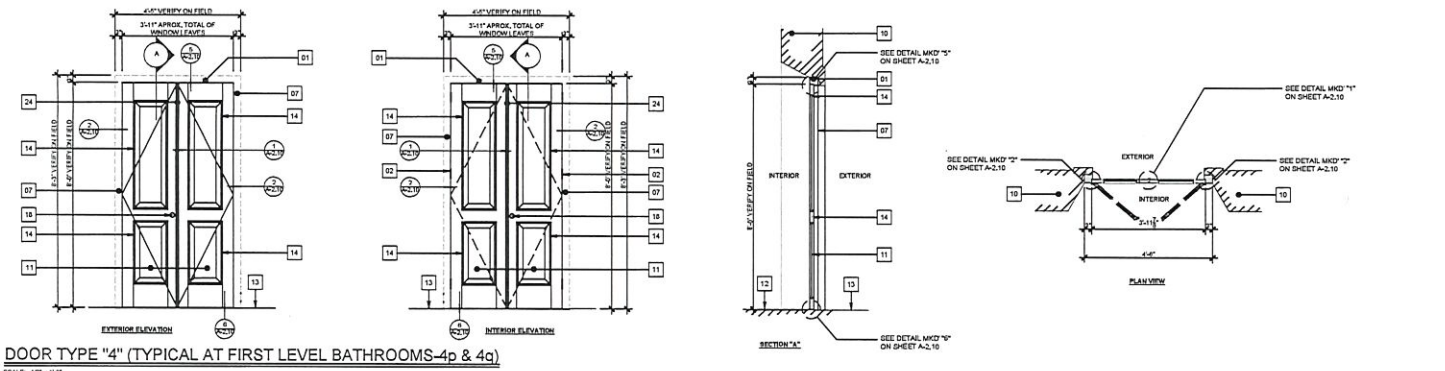

DOOR TYPE "4" (TYPICAL AT FIRST LEVEL BATHROOMS-4p & 4q)

SCALE: 1/2" = 1'-0"

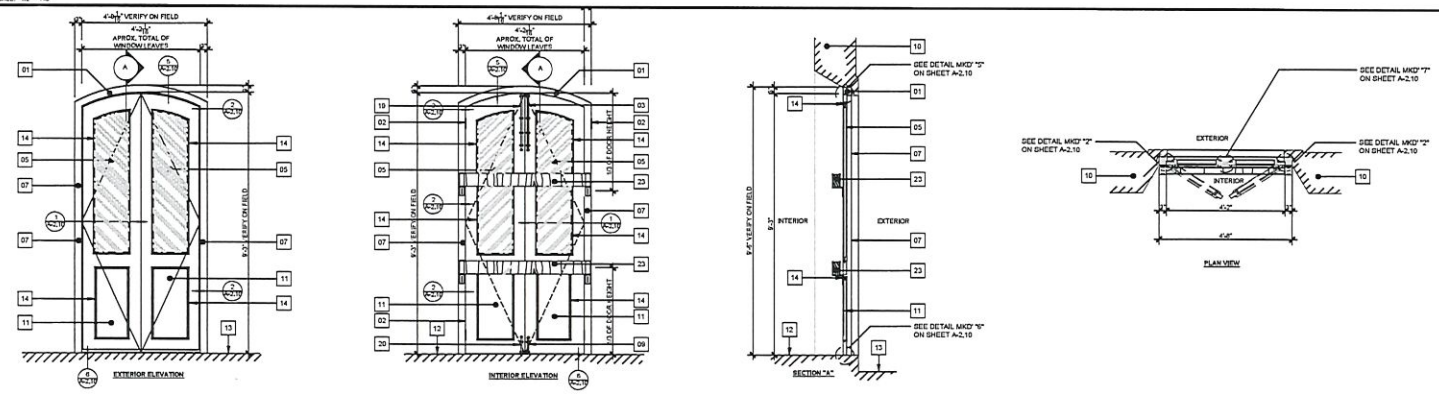

DOOR TYPE "5" (TYPICAL AT FIRST LEVEL)

SCALE: 1/2" = 1'-0"

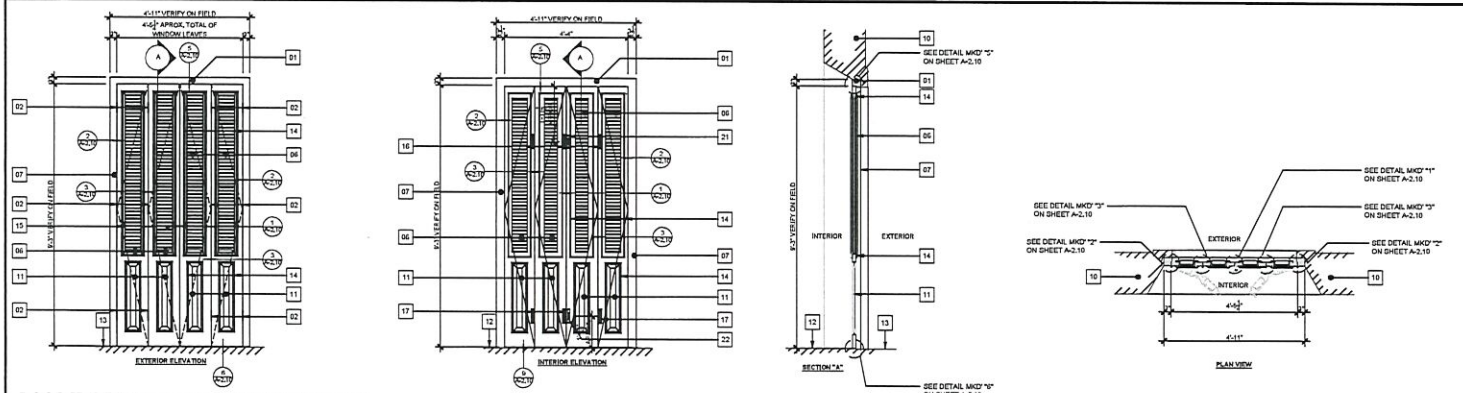

DOOR TYPE "6" (TYPICAL AT SECOND LEVEL)

SCALE: 1/2" = 1'-0"

DOORS KEY NOTES:

01 EXISTING TOP DOOR WOOD FRAME TO REMAIN.
02 EXISTING DOOR HINGES TO REMAIN (TYPICAL).
03 EXISTING TOP VINTAGE DUTCH BOLT SURFACE LOCKING DEVICE TO REMAIN (TYPICAL).
04 EXISTING MASONRY ARCH AT EXTERIOR.
05 EXISTING FIXED GLASS TO REMAIN.
06 EXISTING WINDOW WOOD JALOUSIE TO REMAIN.
07 EXISTING SIDE DOOR WOOD FRAME TO REMAIN.
08 EXISTING BOTTOM WINDOW WOOD FRAME TO REMAIN.
09 EXISTING BOTTOM VINTAGE DUTCH BOLT SURFACE MOUNTED LOCKING DEVICE TO REMAIN (TYPICAL).
10 EXISTING MASONRY WALL TO REMAIN.
11 EXISTING WOOD FIXED PANEL TO REMAIN.
12 EXISTING INTERIOR FLOOR FINISH TO REMAIN.
13 EXISTING EXTERIOR FLOOR FINISH TO REMAIN.
14 EXISTING WOOD MOLDING TO REMAIN (TYPICAL).
15 EXISTING WOOD JALOUSIE OPERATOR TO REMAIN (TYPICAL).
16 EXISTING TOP WOOD DOOR MANUAL FLUSHBOLT VERTICAL LOCKING DEVICE TO REMAIN.
17 EXISTING BOTTOM WOOD DOOR MANUAL FLUSHBOLT VERTICAL LOCKING DEVICE TO REMAIN.
18 EXISTING DOOR HANDLE TO REMAIN.
19 NEW TOP VINTAGE DUTCH BOLT SURFACE LOCKING DEVICE TO REMAIN (TYPICAL).
20 NEW BOTTOM VINTAGE DUTCH BOLT SURFACE MOUNTED LOCKING DEVICE TO REMAIN (TYPICAL).
21 NEW TOP WOOD DOOR MANUAL FLUSHBOLT VERTICAL LOCKING DEVICE TO REMAIN.
22 NEW BOTTOM WOOD DOOR MANUAL FLUSHBOLT VERTICAL LOCKING DEVICE TO REMAIN, SEE DETAILS
23 NEW WOODEN HORIZONTAL LOCKING DEVICE (BARRICADE TYPE).
24 EXISTING ASTRAGAL TO REMAIN.
25 EXISTING FIXED WOOD LOVERS TO REMAIN.

IMPORTANT NOTES ABOUT DOORS IN THIS PROJECT

1. ALL DOORS DIMENSIONS IN ELEVATIONS AND SECTIONS ARE FOR REFERENCE. CONTRACTOR SHALL VERIFY EACH DOORS DIMENSIONS INCLUDING MOLDINGS, FRAMES AND DOOR LEAVES IN ORDER TO COORDINATE THE PROPER INSTALLATION OF THE PROPOSED LOCKING HARDWARE AND WEATHERSTRIP COMPONENTS.

2. CONTRACTOR SHALL SUPPLY SHOP DRAWINGS FOR THE INSTALLATION OF EACH LOCKING HARDWARE AND WEATHER STRIP COMPONENTS.

3. DOORS SHALL BE REPAIRED (IF NEEDED) AND FINISHED IN ORDER TO MAINTAIN THE PROPER OPERATION OF LOCKING HARDWARE (EXISTING & PROPOSED). PROPER OPERATION OF THE WEATHERSTRIP MATERIAL AND GOOD AESTHETIC AFTER THE INSTALLATION OF LOCKING HARDWARE AND WEATHERSTRIP MATERIAL.

4. PAINT OF DOORS THAT HAVE TO BE PAINTED (IF NEEDED) WILL BE SELECTED BY ARCHITECT / ENGINEER.

5. SEE IMPORTANT NOTES ABOUT DOORS AND WINDOWS DETAILS ON SHEETS A-2.10 & A-2.11.

6. FOR LOCKING DEVICES QUANTITIES OF EACH DOORS REFER TO SHEET A-2.0b.

ENGINEERED ADVANTAGE, PSC
P.O. BOX 6025
San Juan, Puerto Rico 00914
p. 787-756-6032 email:pjvagnetti@eapsc.net

PROJECT: CONSTRUCTION FOR HAZARD MITIGATION FOR STATE DEPARTMENT BUILDING

ADDRESS: SAN JOSE STREET SAN JUAN, PUERTO RICO

OWNER:

GOAL:

DRAWN BY:	D. LUGO
REVIEWED:	P. J. VAGNETTI
DATE:	2021-09-09
PROJECT NO:	20-720

NO.	REVISION	DATE

SHEET TITLE:

EXISTING DOORS ELEVATIONS W/ PROPOSED LOCKING HARDWARE

PAGE NUMBER

A-2.6

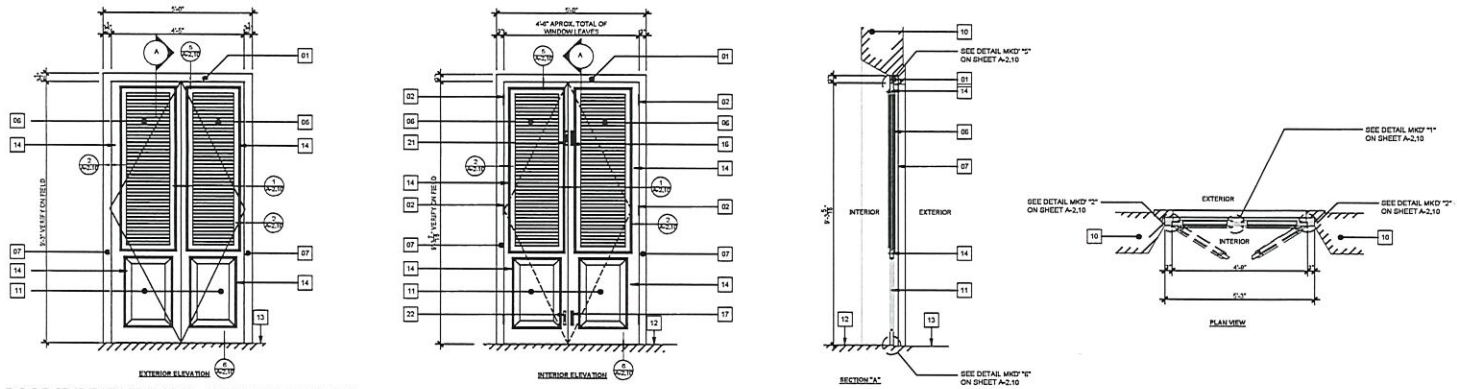

DOOR TYPE "7" (TYPICAL AT SECOND LEVEL)

SCALE: 1/2" = 1'-0"

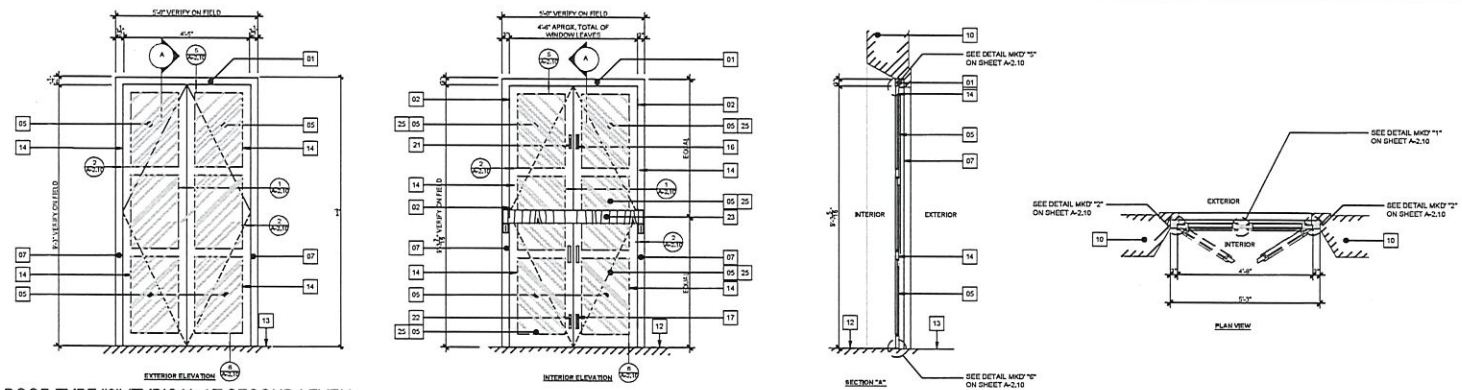

DOOR TYPE "8" (TYPICAL AT SECOND LEVEL)

SCALE: 1/2" = 1'-0"

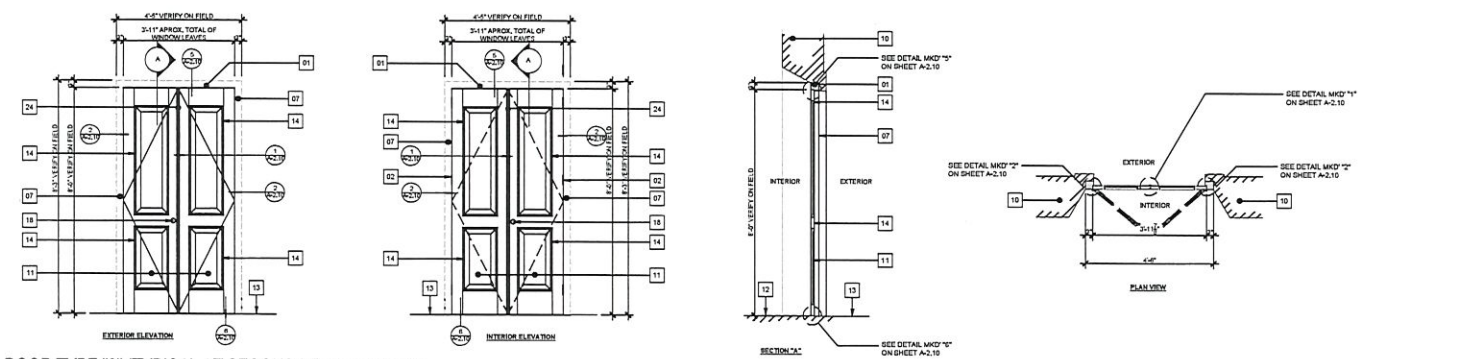

DOOR TYPE "9" (TYPICAL AT SECOND LEVEL-9a TO 9s)

SCALE: 1/2" = 1'-0"

WINDOWS KEY NOTES:

01 EXISTING TOP WINDOW WOOD FRAME TO REMAIN.
02 EXISTING WINDOW HINGES TO REMAIN (TYPICAL).
03 EXISTING TOP VINTAGE DUTCH BOLT SURFACE LOCKING DEVICE TO REMAIN (TYPICAL).
04 EXISTING MASONRY ARCH AT EXTERIOR.
05 EXISTING FIXED GLASS TO REMAIN.
06 EXISTING WINDOW WOOD JALOUSIE TO REMAIN.
07 EXISTING SIDE WINDOW WOOD FRAME TO REMAIN.
08 EXISTING BOTTOM WINDOW WOOD FRAME TO REMAIN.
09 EXISTING BOTTOM VINTAGE DUTCH BOLT SURFACE MOUNTED LOCKING DEVICE TO REMAIN (TYPICAL).
10 EXISTING MASONRY WALL TO REMAIN.
11 EXISTING WOOD FIXED PANEL TO REMAIN.
12 EXISTING INTERIOR FLOOR FINISH TO REMAIN.
13 EXISTING EXTERIOR FLOOR FINISH TO REMAIN.
14 EXISTING WOOD MOLDING TO REMAIN (TYPICAL).
15 EXISTING WOOD JALOUSIE OPERATOR TO REMAIN (TYPICAL).
16 EXISTING TOP WOOD DOOR MANUAL FLUSHBOLT VERTICAL LOCKING DEVICE TO REMAIN.
17 EXISTING BOTTOM WOOD DOOR MANUAL FLUSHBOLT VERTICAL LOCKING DEVICE TO REMAIN.
18 EXISTING WINDOW HANDLE TO REMAIN.
19 NEW TOP VINTAGE DUTCH BOLT SURFACE LOCKING DEVICE TO REMAIN (TYPICAL).
20 NEW BOTTOM VINTAGE DUTCH BOLT SURFACE MOUNTED LOCKING DEVICE TO REMAIN (TYPICAL).
21 NEW TOP WOOD DOOR MANUAL FLUSHBOLT VERTICAL LOCKING DEVICE TO REMAIN.
22 NEW BOTTOM WOOD DOOR MANUAL FLUSHBOLT VERTICAL LOCKING DEVICE TO REMAIN. SEE DETAILS
23 NEW WOODEN HORIZONTAL LOCKING DEVICE (BARRICADE TYPE).
24 EXISTING ASTRAGAL TO REMAIN
25 3M SAFETY AND SECURITY WINDOW FILM (EQUAL OR SIMILAR)

IMPORTANT NOTES ABOUT DOORS IN THIS PROJECT

1. ALL DOORS DIMENSIONS IN ELEVATIONS AND SECTIONS ARE FOR REFERENCE. CONTRACTOR SHALL VERIFY EACH DOORS DIMENSIONS INCLUDING MOLDINGS, FRAMES AND DOOR LEAVES IN ORDER TO COORDINATE THE PROPER INSTALLATION OF THE PROPOSED LOCKING HARDWARE AND WEATHERSTRIP COMPONENTS.

2. CONTRACTOR SHALL SUPPLY SHOP DRAWINGS FOR THE INSTALLATION OF EACH LOCKING HARDWARE AND WEATHER STRIP COMPONENTS.

3. DOORS SHALL BE REPAIRED (IF NEEDED) AND FINISHED IN ORDER TO MAINTAIN THE PROPER OPERATION OF LOCKING HARDWARE (EXISTING & PROPOSED). PROPER OPERATION OF THE WEATHERSTRIP MATERIAL AND GOOD AESTHETIC AFTER THE INSTALLATION OF LOCKING HARDWARE AND WEATHERSTRIP MATERIAL.

4. PAINT OF DOORS THAT HAVE TO BE PAINTED (IF NEEDED) WILL BE SELECTED BY ARCHITECT / ENGINEER.

5. SEE IMPORTANT NOTES ABOUT DOORS AND WINDOWS DETAILS ON SHEETS A-2.10 & A-2.11.

6. FOR LOCKING DEVICES QUANTITIES OF EACH DOORS REFER TO SHEET A-2.0b.

ENGINEERED ADVANTAGE, PSC
P.O. BOX 6025
San Juan, Puerto Rico 00914
p. 787-756-6032 email.pjvagnetti@eapsc.net

PROJECT
CONSTRUCTION FOR
HAZARD MITIGATION FOR STATE DEPARTMENT BUILDING

ADDRESS
SAN JOSE STREET
SAN JUAN, PUERTO RICO

OWNER:

GEAL:

DRAWN BY:	D. LUGO
REVIEWED:	P. J. VAGNETTI
DATE:	2021-09-09
PROJECT NO:	20-720

NO.	REVISION	DATE

SHEET TITLE:

EXISTING DOORS ELEVATIONS W/ PROPOSED LOCKING HARDWARE

PAGE NUMBER

A-2.7

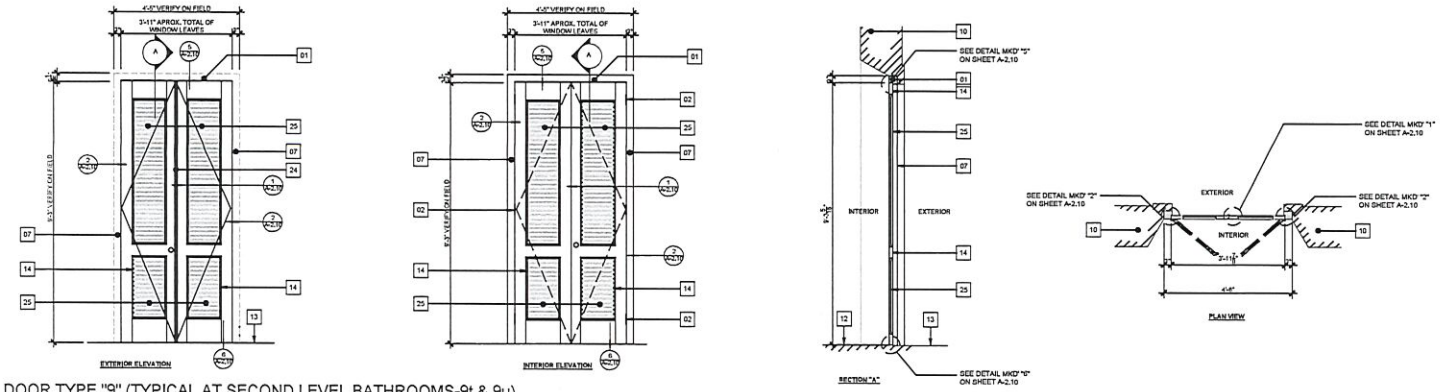

DOOR TYPE "9" (TYPICAL AT SECOND LEVEL BATHROOMS-9t & 9u)

SCALE: 1/2" = 1'-0"

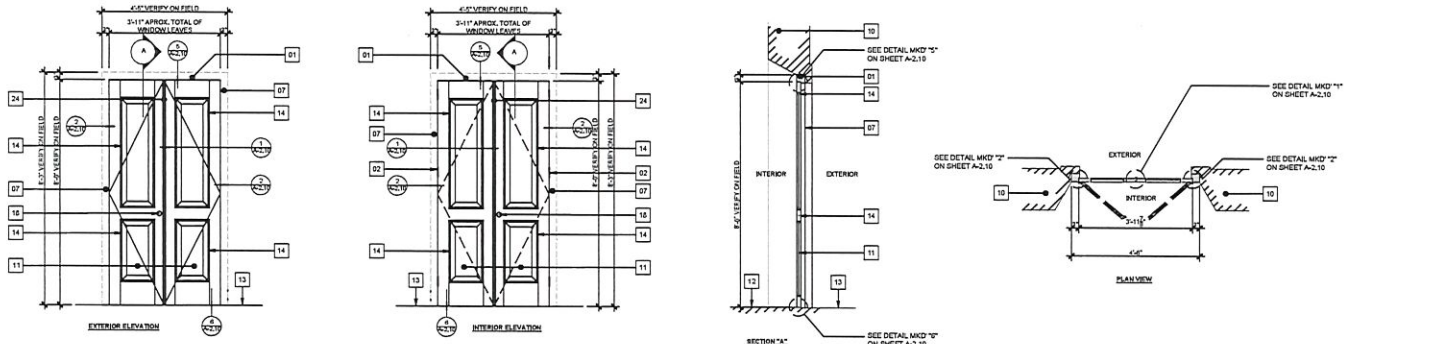

DOOR TYPE "10" (TYPICAL AT THIRD LEVEL-10a TO 10s)

SCALE: 1/2" = 1'-0"

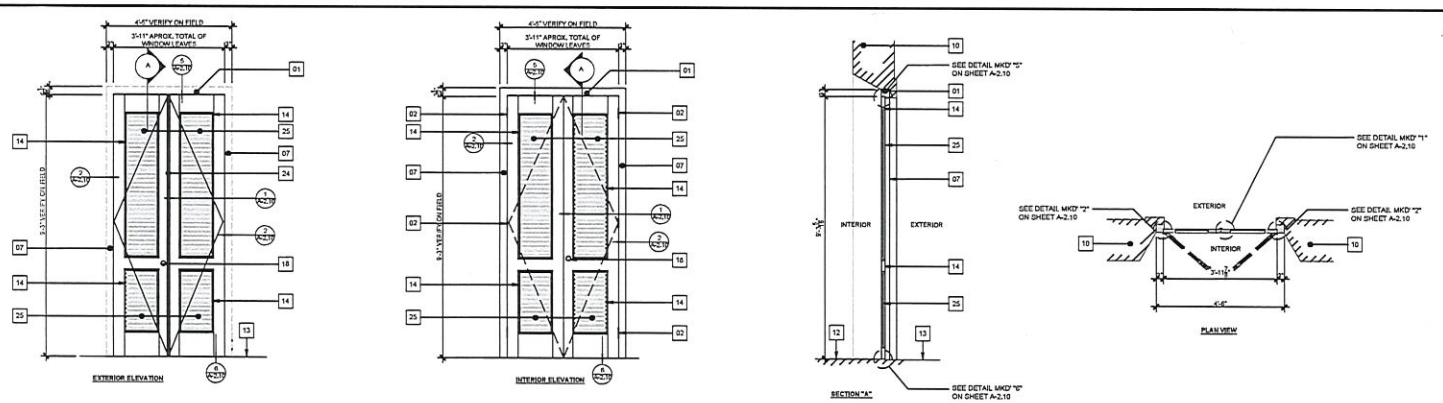

DOOR TYPE "10" (TYPICAL AT THIRD LEVEL BATHROOMS-10t & 10u)

SCALE: 1/2" = 1'-0"

DOORS KEY NOTES:

01 EXISTING TOP DOOR WOOD FRAME TO REMAIN.
02 EXISTING DOOR HINGES TO REMAIN (TYPICAL).
03 EXISTING TOP VINTAGE DUTCH BOLT SURFACE LOCKING DEVICE TO REMAIN (TYPICAL).
04 EXISTING MASONRY ARCH AT EXTERIOR.
05 EXISTING FIXED GLASS TO REMAIN.
06 EXISTING WINDOW WOOD JALOUSIE TO REMAIN.
07 EXISTING SIDE DOOR WOOD FRAME TO REMAIN.
08 EXISTING BOTTOM WINDOW WOOD FRAME TO REMAIN.
09 EXISTING BOTTOM VINTAGE DUTCH BOLT SURFACE MOUNTED LOCKING DEVICE TO REMAIN (TYPICAL).
10 EXISTING MASONRY WALL TO REMAIN.
11 EXISTING WOOD FIXED PANEL TO REMAIN.
12 EXISTING INTERIOR FLOOR FINISH TO REMAIN.
13 EXISTING EXTERIOR FLOOR FINISH TO REMAIN.
14 EXISTING DOOR MOLDING TO REMAIN (TYPICAL).
15 EXISTING WOOD JALOUSIE OPERATOR TO REMAIN (TYPICAL).
16 EXISTING TOP WOOD DOOR MANUAL FLUSHBOLT VERTICAL LOCKING DEVICE TO REMAIN.
17 EXISTING BOTTOM WOOD DOOR MANUAL FLUSHBOLT VERTICAL LOCKING DEVICE TO REMAIN.
18 EXISTING DOOR HANDLE TO REMAIN.
19 NEW TOP VINTAGE DUTCH BOLT SURFACE LOCKING DEVICE TO REMAIN (TYPICAL).
20 NEW BOTTOM VINTAGE DUTCH BOLT SURFACE MOUNTED LOCKING DEVICE TO REMAIN (TYPICAL).
21 NEW TOP WOOD DOOR MANUAL FLUSHBOLT VERTICAL LOCKING DEVICE TO REMAIN.
22 NEW BOTTOM WOOD DOOR MANUAL FLUSHBOLT VERTICAL LOCKING DEVICE TO REMAIN, SEE DETAILS
23 NEW WOODEN HORIZONTAL LOCKING DEVICE (BARRICADE TYPE).
24 EXISTING ASTRAGAL TO REMAIN
25 EXISTING WOOD FIXED LOUVERS TO REMAIN.

IMPORTANT NOTES ABOUT DOORS IN THIS PROJECT

1. ALL DOORS DIMENSIONS IN ELEVATIONS AND SECTIONS ARE FOR REFERENCE. CONTRACTOR SHALL VERIFY EACH DOORS DIMENSIONS INCLUDING MOLDINGS, FRAMES AND DOOR LEAVES IN ORDER TO COORDINATE THE PROPER INSTALLATION OF THE PROPOSED LOCKING HARDWARE AND WEATHERSTRIP COMPONENTS.

2. CONTRACTOR SHALL SUPPLY SHOP DRAWINGS FOR THE INSTALLATION OF EACH LOCKING HARDWARE AND WEATHER STRIP COMPONENTS.

3. DOORS SHALL BE REPAIRED (IF NEEDED) AND FINISHED IN ORDER TO MAINTAIN THE PROPER OPERATION OF LOCKING HARDWARE (EXISTING & PROPOSED). PROPER OPERATION OF THE WEATHERSTRIP MATERIAL AND GOOD AESTHETIC AFTER THE INSTALLATION OF LOCKING HARDWARE AND WEATHERSTRIP MATERIAL.

4. PAINT OF DOORS THAT HAVE TO BE PAINTED (IF NEEDED) WILL BE SELECTED BY ARCHITECT / ENGINEER.

5. SEE IMPORTANT NOTES ABOUT DOORS AND WINDOWS DETAILS ON SHEETS A-2.10 & A-2.11.

6. FOR LOCKING DEVICES QUANTITIES OF EACH DOORS REFER TO SHEET A-2.0b.

ENGINEERED ADVANTAGE, PSC
P.O. BOX 6025
San Juan, Puerto Rico 00914
p. 787-756-6032 email:pivagnetti@eapsc.net

PROJECT: CONSTRUCTION FOR HAZARD MITIGATION FOR STATE DEPARTMENT BUILDING

ADDRESS: SAN JOSE STREET SAN JUAN, PUERTO RICO

OWNER:

SEAL:

DRAWN BY:	D. LUGO
REVIEWED BY:	P. J. VAGNETTI
DATE:	2021-09-09
PROJECT NO:	20-720

NO.	REVISION	DATE

SHEET TITLE:

EXISTING DOORS ELEVATIONS W/ PROPOSED LOCKING HARDWARE

PAGE NUMBER

A-2.8

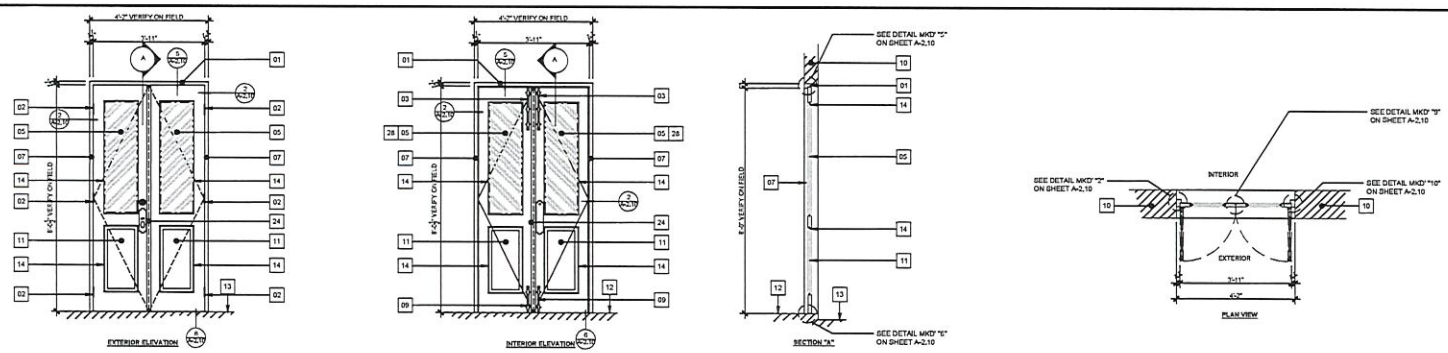

DOOR TYPE "11" (TYPICAL AT FOURTH LEVEL)

SCALE: 1/2" = 1'-0"

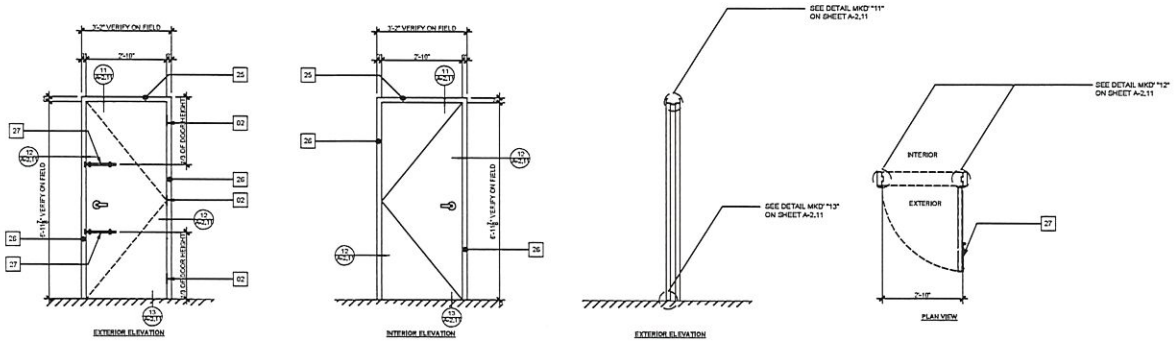

DOOR TYPE "12" (TYPICAL AT ROOF LEVEL)

SCALE: 1/2" = 1'-0"

DOORS KEY NOTES:

01 EXISTING TOP DOOR WOOD FRAME TO REMAIN.
02 EXISTING DOOR HINGES TO REMAIN (TYPICAL).
03 EXISTING TOP VINTAGE DUTCH BOLT SURFACE LOCKING DEVICE TO REMAIN (TYPICAL).
04 EXISTING MASONRY ARCH AT EXTERIOR.
05 EXISTING FIXED GLASS TO REMAIN.
06 EXISTING WINDOW WOOD JALOUSIE TO REMAIN.
07 EXISTING SIDE DOOR WOOD FRAME TO REMAIN.
08 EXISTING BOTTOM WINDOW WOOD FRAME TO REMAIN.
09 EXISTING BOTTOM VINTAGE DUTCH BOLT SURFACE MOUNTED LOCKING DEVICE TO REMAIN (TYPICAL).
10 EXISTING MASONRY WALL TO REMAIN.
11 EXISTING WOOD FIXED PANEL TO REMAIN.
12 EXISTING INTERIOR FLOOR FINISH TO REMAIN.
13 EXISTING EXTERIOR FLOOR FINISH TO REMAIN.
14 EXISTING DOOR MOLDING TO REMAIN (TYPICAL).
15 EXISTING WOOD JALOUSIE OPERATOR TO REMAIN (TYPICAL).
16 EXISTING TOP WOOD DOOR MANUAL FLUSHBOLT VERTICAL LOCKING DEVICE TO REMAIN.
17 EXISTING BOTTOM WOOD DOOR MANUAL FLUSHBOLT VERTICAL LOCKING DEVICE TO REMAIN.
18 EXISTING DOOR HANDLE TO REMAIN.
19 NEW TOP VINTAGE DUTCH BOLT SURFACE LOCKING DEVICE TO REMAIN (TYPICAL).
20 NEW BOTTOM VINTAGE DUTCH BOLT SURFACE MOUNTED LOCKING DEVICE TO REMAIN (TYPICAL).
21 NEW TOP WOOD DOOR MANUAL FLUSHBOLT VERTICAL LOCKING DEVICE TO REMAIN.
22 NEW BOTTOM WOOD DOOR MANUAL FLUSHBOLT VERTICAL LOCKING DEVICE TO REMAIN. SEE DETAILS
23 NEW WOODEN HORIZONTAL LOCKING DEVICE (BARRICADE TYPE).
24 EXISTING ASTRAGAL TO REMAIN.
25 EXISTING TOP DOOR METAL FRAME.
26 EXISTING SIDE DOOR METAL FRAME.
27 NEW HORIZONTAL SURFACE LOCKING DEVICE. SEE DETAIL MKD "5" ON SHEET A-2.12
28 3M SAFETY AND SECURITY WINDOW FILM (EQUAL OR SIMILAR)

IMPORTANT NOTES ABOUT DOORS IN THIS PROJECT

1. ALL DOORS DIMENSIONS IN ELEVATIONS AND SECTIONS ARE FOR REFERENCE. CONTRACTOR SHALL VERIFY EACH DOORS DIMENSIONS INCLUDING MOLDINGS, FRAMES AND DOOR LEAVES IN ORDER TO COORDINATE THE PROPER INSTALLATION OF THE PROPOSED LOCKING HARDWARE AND WEATHERSTRIP COMPONENTS.

2. CONTRACTOR SHALL SUPPLY SHOP DRAWINGS FOR THE INSTALLATION OF EACH LOCKING HARDWARE AND WEATHER STRIP COMPONENTS.

3. DOORS SHALL BE REPAIRED (IF NEEDED) AND FINISHED IN ORDER TO MAINTAIN THE PROPER OPERATION OF LOCKING HARDWARE (EXISTING & PROPOSED). PROPER OPERATION OF THE WEATHERSTRIP MATERIAL AND GOOD AESTHETIC AFTER THE INSTALLATION OF LOCKING HARDWARE AND WEATHERSTRIP MATERIAL.

4. PAINT OF DOORS THAT HAVE TO BE PAINTED (IF NEEDED) WILL BE SELECTED BY ARCHITECT / ENGINEER.

5. SEE IMPORTANT NOTES ABOUT DOORS AND WINDOWS DETAILS ON SHEETS A-2.10 & A-2.11.

6. FOR LOCKING DEVICES QUANTITIES OF EACH DOORS REFER TO SHEET A-2.0b.

ENGINEERED ADVANTAGE, PSC
P.O. BOX 6025
San Juan, Puerto Rico 00914
p. 787-756-6032 email.pjvagnetti@eapsc.net

PROJECT
CONSTRUCTION FOR
HAZARD MITIGATION FOR STATE DEPARTMENT BUILDING

ADDRESS
SAN JOSE STREET
SAN JUAN, PUERTO RICO

OWNER:

SEAL:

DRAWN BY:	D. LUGO
REVIEWED BY:	P. J. VAGNETTI
DATE:	2021-09-09
PROJECT NO.	20-720

NO.	REVISION	DATE

SHEET TITLE:

EXISTING DOORS ELEVATIONS W/ PROPOSED LOCKING HARDWARE

PAGE NUMBER

A-2.9

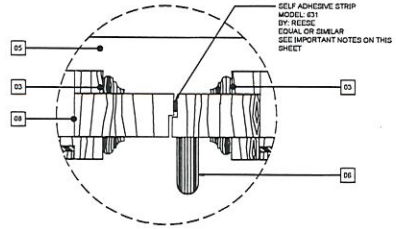

DETAIL MKD' "1"

SCALE: 6" = 1'-0"

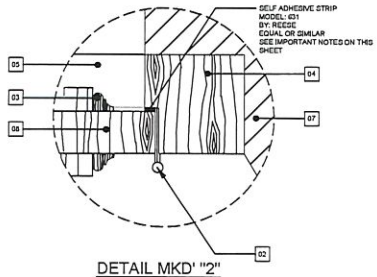

DETAIL MKD' "2"

SCALE: 6" = 1'-0"

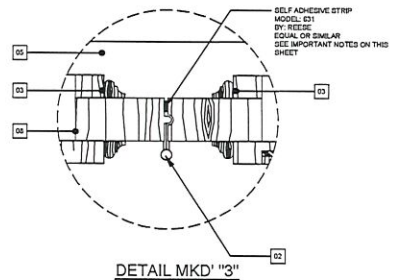

DETAIL MKD' "3"

SCALE: 6" = 1'-0"

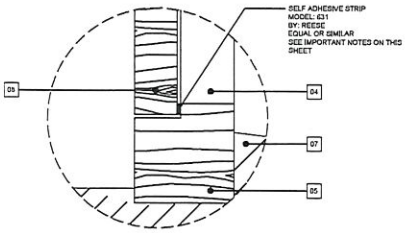

DETAIL MKD' "4"

SCALE: 6" = 1'-0"

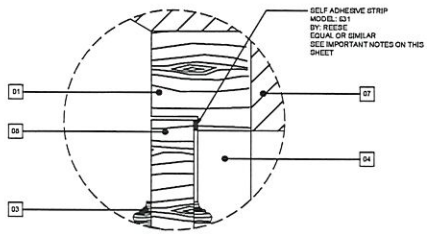

DETAIL MKD' "5"

SCALE: 6" = 1'-0"

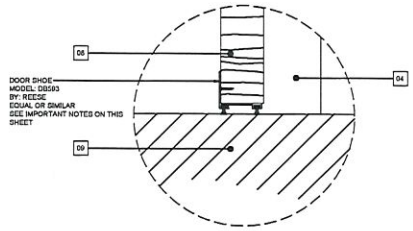

DETAIL MKD' "6"

SCALE: 6" = 1'-0"

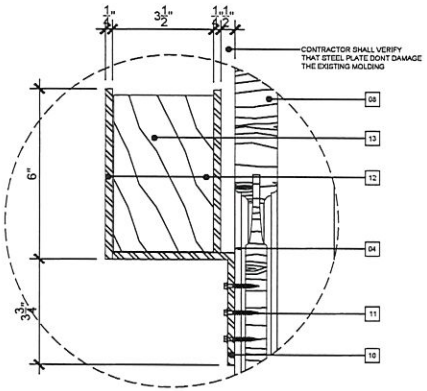

DETAIL MKD' "7"

SCALE: 6" = 1'-0"

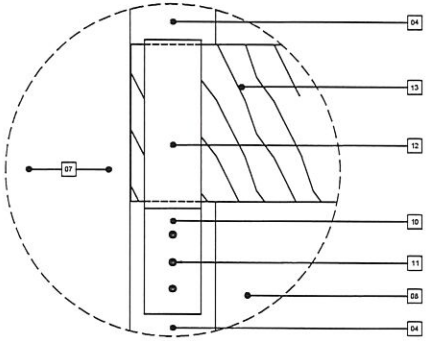

DETAIL MKD' "8"

SCALE: 6" = 1'-0"

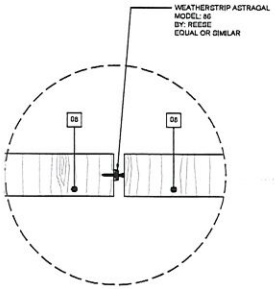

DETAIL MKD' "9"

SCALE: 6" = 1'-0"

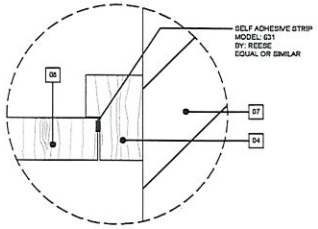

DETAIL MKD' "10"

SCALE: 6" = 1'-0"

WINDOWS & DOORS KEY NOTES:

01 EXISTING TOP WINDOW OR DOOR WOOD FRAME TO REMAIN.

02 EXISTING WINDOW OR DOOR HINGES TO REMAIN (TYPICAL).

03 EXISTING WOOD MOLDING TO REMAIN (TYPICAL).

04 EXISTING WOOD VERTICAL FRAME TO REMAIN.

05 EXISTING WOOD HORIZONTAL BOTTOM FRAME TO REMAIN.

06 EXISTING WINDOW HANDLE TO REMAIN.

07 EXISTING MASONRY WALL TO REMAIN.

08 EXISTING WOOD WINDOW OR DOOR.

09 EXISTING FLOOR TO REMAIN.

10 NEW L 4-1/2" X 4"1/2" X1/4" PAINTED IN FLAT BLACK COLOR.

11 NEW SD #10 X1-1/2" SCREWS ANCHORED INTO EXISTING WOOD FRAME SCREWS HEAD SHALL BE PAINTED IN FLAT BLACK COLOR.

12 NEW PL 5-3/4" X 2" X 1/4" PAINTED IN FLAT BLACK COLOR.

13 NEW 3-1/2" X 5-1/2" X 5'-0" APPROX. (VERIFY ON FIELD) LONG WOOD

IMPORTANT NOTES ABOUT WINDOWS & DOORS DETAILS IN THIS PROJECT

1. ALL DOORS & WINDOWS ELEVATIONS AND SECTIONS ARE FOR REFERENCE. CONTRACTOR SHALL VERIFY EACH DOOR AND WINDOW DIMENSIONS INCLUDING MOLDINGS, FRAMES AND DOOR LEAVES IN ORDER TO COORDINATE THE PROPER INSTALLATION OF THE PROPOSED LOCKING HARDWARE AND WEATHERSTRIP COMPONENTS.

2. CONTRACTOR SHALL SUPPLY SHOP DRAWINGS FOR THE INSTALLATION OF EACH LOCKING HARDWARE AND WEATHER STRIP COMPONENTS.

3. DOORS AND WINDOWS SHALL BE REPAIRED AND OR ALIGNED (IF NEEDED) AND FINISHED IN ORDER TO MAINTAIN THE PROPER OPERATION OF LOCKING HARDWARE (EXISTING & PROPOSED), PROPER SEAL OF THE WEATHERSTRIP MATERIAL AND GOOD AESTHETIC AFTER THE INSTALLATION OF LOCKING HARDWARE AND WEATHERSTRIP MATERIAL.

4. PAINT OF DOORS AND WINDOWS THAT HAVE TO BE PAINTED (IF NEEDED) WILL BE SELECTED BY ARCHITECT / ENGINEER.

5. DOORS AND WINDOWS GAPS BETWEEN LEAVES AND/OR FRAME MAY VARIES. CONTRACTOR SHALL VERIFY EACH DOOR AND WINDOW IN ORDER TO MAKE SURE THAT WEATHERSTRIP MATERIAL WILL COVER THAT GAP BETWEEN DOORS AND WINDOW LEAVES AND OR FRAME AND PROPERLY SEAL THE GAP.

6. CONTRACTOR SHALL SUBMITT SHOP DRAWINGS OF THE PROPER INSTALLATIONS AND OR FABRICATIONS.

7. CONTRACTOR SHALL INSTALL ALL WEATHERSTRIPS AND LOCKING DEVICES AS PER MANUFACTURER INSTRUCTION AND OR RECOMMENDATIONS.

8. CONTRACTOR SHALL TEST THE WEATHERSTRIP MATERIAL ADHESION IN A SMALL AREA IN DOOR, WINDOWS AND FRAMES BEFORE PROCEEDING ENTIRELY. CONTRACTOR IS RESPONSIBLE FOR BE SURE THAT THE SURFACE IS SMOOTH AND PREPARE SURFACE IF NECESSARY AS REQUIRED BY MANUFACTURER SPECIFICATIONS.

9. CONTRACTOR SHALL VERIFY THAT DOORS AND WINDOWS PROPERLY OPERATES (CLOSE, OPEN PROPERLY) INCLUDING ALL LOCKING DEVICES, AFTER WEATHERSTRIP AND LOCKING DEVICES INSTALLATIONS.

10. CONTRACTOR SHALL VISIT THE BUILDING TO GET FAMILIARIZED WITH THE ENTIRE SCOPE OF WORK.

ENGINEERED ADVANTAGE, PSC

P.O. BOX 6025
San Juan, Puerto Rico 00914
p. 787-756-6032 email.pjvagnetti@eapsc.net

PROJECT
CONSTRUCTION FOR
HAZARD MITIGATION FOR STATE DEPARTMENT BUILDING

ADDRESS
SAN JOSE STREET
SAN JUAN, PUERTO RICO

OWNER:

GEAL:

DRAWN BY:	D. LUGO
REVIEWED:	P. J. VAGNETTI
DATE:	2021-04-09
PROJECT NO:	20-726

NO.	REVISION	DATE

SHEET TITLE:
WINDOWS & DOORS WEATHERSTRIPS & LOCKING DEVICES DETAILS

PAGE NUMBER

A-2.10

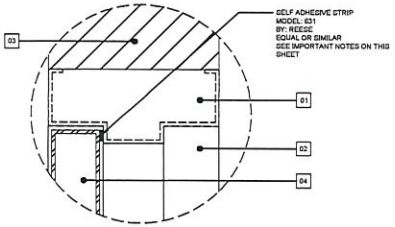

DETAIL MKD' "11"

SCALE: 6" = 1'-0"

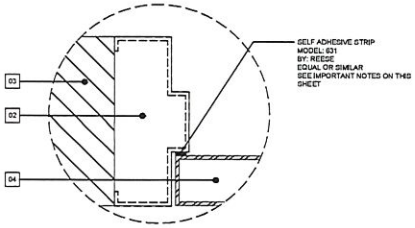

DETAIL MKD' "12"

SCALE: 6" = 1'-0"

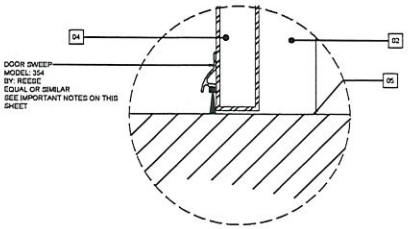

DETAIL MKD' "13"

SCALE: 6" = 1'-0"

WINDOWS & DOORS KEY NOTES:

01 EXISTING TOP DOOR METAL FRAME TO REMAIN.

02 EXISTING VERTICAL METAL FRAME TO REMAIN.

03 EXISTING MASONRY WALL TO REMAIN.

04 EXISTING METAL DOOR.

05 EXISTING FLOOR TO REMAIN.

IMPORTANT NOTES ABOUT WINDOWS & DOORS DETAILS IN THIS PROJECT

1. ALL DOORS & WINDOWS ELEVATIONS AND SECTIONS ARE FOR REFERENCE. CONTRACTOR SHALL VERIFY EACH DOOR AND WINDOW DIMENSIONS INCLUDING MOLDINGS, FRAMES AND DOOR LEAVES IN ORDER TO COORDINATE THE PROPER INSTALLATION OF THE PROPOSED LOCKING HARDWARE AND WEATHERSTRIP COMPONENTS.

2. CONTRACTOR SHALL SUPPLY SHOP DRAWINGS FOR THE INSTALLATION OF EACH LOCKING HARDWARE AND WEATHER STRIP COMPONENTS.

3. DOORS AND WINDOWS SHALL BE REPAIRED AND OR ALIGNED (IF NEEDED) AND FINISHED IN ORDER TO MAINTAIN THE PROPER OPERATION OF LOCKING HARDWARE (EXISTING & PROPOSED), PROPER SEAL OF THE WEATHERSTRIP MATERIAL AND GOOD AESTHETIC AFTER THE INSTALLATION OF LOCKING HARDWARE AND WEATHERSTRIP MATERIAL.

4. PAINT OF DOORS AND WINDOWS THAT HAVE TO BE PAINTED (IF NEEDED) WILL BE SELECTED BY ARCHITECT / ENGINEER.

5. DOORS AND WINDOWS GAPS BETWEEN LEAVES AND/OR FRAME MAY VARIES. CONTRACTOR SHALL VERIFY EACH DOOR AND WINDOW IN ORDER TO MAKE SURE THAT WEATHERSTRIP MATERIAL WILL COVER THAT GAP BETWEEN DOORS AND WINDOW LEAVES AND OR FRAME AND PROPERLY SEAL THE GAP.

6. CONTRACTOR SHALL SUBMITT SHOP DRAWINGS OF THE PROPER INSTALLATIONS AND OR FABRICATIONS.

7. CONTRACTOR SHALL INSTALL ALL WEATHERSTRIPS AND LOCKING DEVICES AS PER MANUFACTURER INSTRUCTION AND OR RECOMMENDATIONS.

8. CONTRACTOR SHALL TEST THE WEATHERSTRIP MATERIAL ADHESION IN A SMALL AREA IN DOOR, WINDOWS AND FRAMES BEFORE PROCEEDING ENTIRELY. CONTRACTOR IS RESPONSIBLE FOR BE SURE THAT THE SURFACE IS SMOOTH AND PREPARE SURFACE IF NECESSARY AS REQUIRED BY MANUFACTURER SPECIFICATIONS.

9. CONTRACTOR SHALL VERIFY THAT DOORS AND WINDOWS PROPERLY OPERATES (CLOSE, OPEN PROPERLY) INCLUDING ALL LOCKING DEVICES, AFTER WEATHERSTRIP AND LOCKING DEVICES INSTALLATIONS.

10. CONTRACTOR SHALL VISIT THE BUILDING TO GET FAMILIARIZED WITH THE ENTIRE SCOPE OF WORK.

ENGINEERED ADVANTAGE, PSC
P.O. BOX 6025
San Juan, Puerto Rico 00914
p. 787-756-0032 ema.E.pavagnetti@eapsc.net

PROJECT
CONSTRUCTION FOR
HAZARD MITIGATION FOR STATE DEPARTMENT BUILDING

ADDRESS
SAN JOSE STREET
SAN JUAN, PUERTO RICO

OWNER:

SEAL:

DRAWN BY:	D. LUGO
REVIEWED BY:	P. J. VAGNETTI
DATE:	2021-09-09
PROJECT No.	20-720

NO.	REVISION	DATE

SHEET TITLE:
WINDOWS & DOORS WEATHERSTRIPS & LOCKING DEVICES DETAILS

PAGE NUMBER

A-2.11

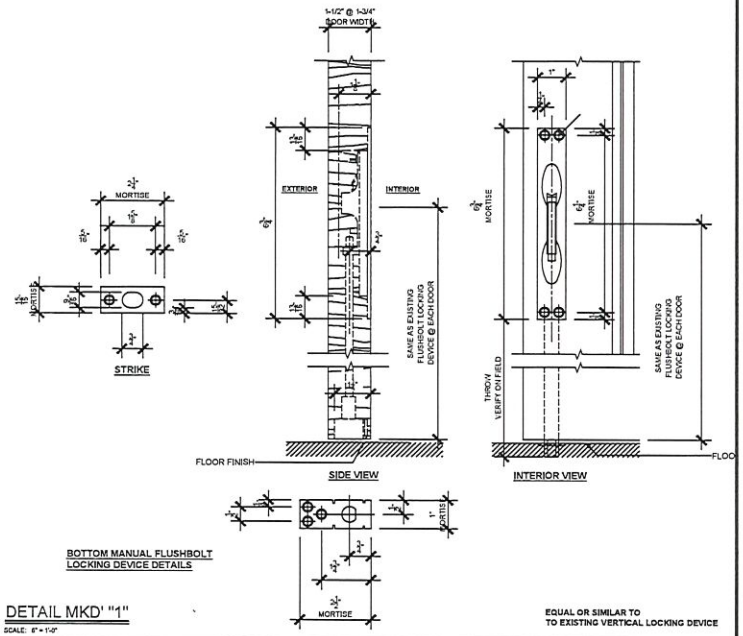

EQUAL OR SIMILAR TO
TO EXISTING VERTICAL LOCKING DEVICE

DETAIL MKD' "1"

SCALE: 6" = 1'-0"

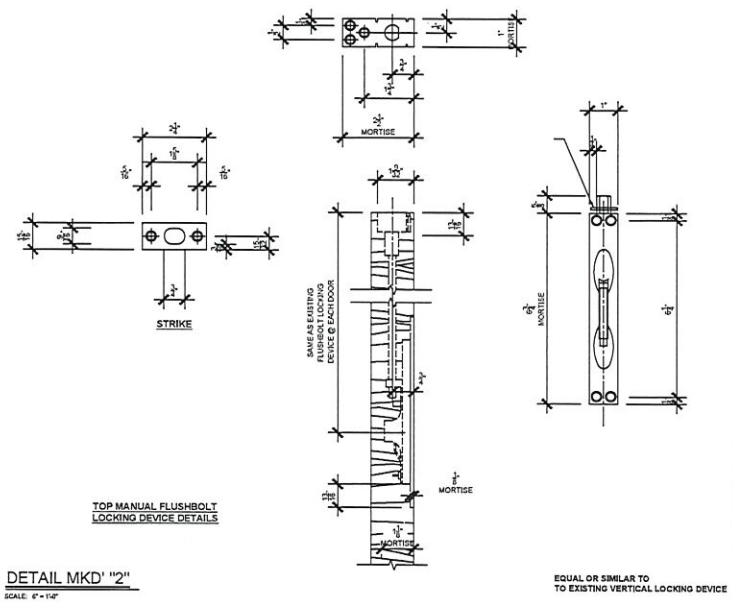

EQUAL OR SIMILAR TO
TO EXISTING VERTICAL LOCKING DEVICE

DETAIL MKD' "2"

SCALE: 6" = 1'-0"

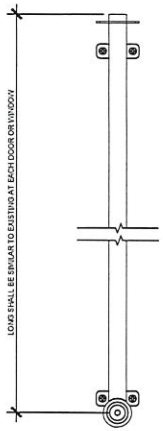

EQUAL OR SIMILAR TO
TO EXISTING VERTICAL LOCKING DEVICE

TOP DUTCH BOLT SURFACE VERTICAL LOCKING DEVICE DETAILS

DETAIL MKD' "3"

SCALE: 6" = 1'-0"

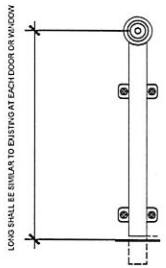

EQUAL OR SIMILAR TO
TO EXISTING VERTICAL LOCKING DEVICE

BOTTOM DUTCH BOLT SURFACE VERTICAL LOCKING DEVICE DETAILS

DETAIL MKD' "4"

SCALE: 6" = 1'-0"

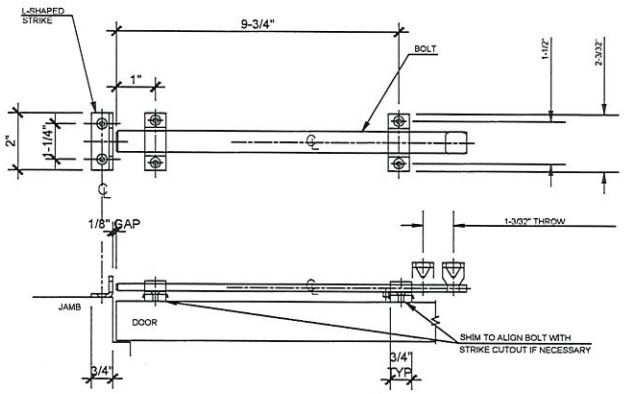

L-SHAPED STRIKE - DOOR FRONT SURFACE INSTALLATION

EQUAL OR SIMILAR TO
276D SURFACE BOLT
BY HAGER

DETAIL MKD' "5"

SCALE: 6" = 1'-0"

IMPORTANT NOTES ABOUT WINDOWS & DOORS DETAILS IN THIS PROJECT

1. ALL DOORS & WINDOWS ELEVATIONS AND SECTIONS ARE FOR REFERENCE. CONTRACTOR SHALL VERIFY EACH DOOR AND WINDOW DIMENSIONS INCLUDING MOLDINGS, FRAMES AND DOOR LEAVES IN ORDER TO COORDINATE THE PROPER INSTALLATION OF THE PROPOSED LOCKING HARDWARE AND WEATHERSTRIP COMPONENTS.

2. CONTRACTOR SHALL SUPPLY SHOP DRAWINGS FOR THE INSTALLATION OF EACH LOCKING HARDWARE AND WEATHER STRIP COMPONENTS.

3. DOORS AND WINDOWS SHALL BE REPAIRED AND OR ALIGNED (IF NEEDED) AND FINISHED IN ORDER TO MAINTAIN THE PROPER OPERATION OF LOCKING HARDWARE (EXISTING & PROPOSED). PROPER SEAL OF THE WEATHERSTRIP MATERIAL AND GOOD AESTHETIC AFTER THE INSTALLATION OF LOCKING HARDWARE AND WEATHERSTRIP MATERIAL.

4. PAINT OF DOORS AND WINDOWS THAT HAVE TO BE PAINTED (IF NEEDED) WILL BE SELECTED BY ARCHITECT / ENGINEER.

5. DOORS AND WINDOWS GAPS BETWEEN LEAVES AND/OR FRAME MAY VARIES. CONTRACTOR SHALL VERIFY EACH DOOR AND WINDOW IN ORDER TO MAKE SURE THAT WEATHERSTRIP MATERIAL WILL COVER THAT GAP BETWEEN DOORS AND WINDOW LEAVES AND OR FRAME AND PROPERLY SEAL THE GAP.

6. CONTRACTOR SHALL SUBMITT SHOP DRAWINGS OF THE PROPER INSTALLATIONS AND OR FABRICATIONS.

7. CONTRACTOR SHALL INSTALL ALL WEATHERSTRIPS AND LOCKING DEVICES AS PER MANUFACTURER INSTRUCTION AND OR RECOMMENDATIONS.

8. CONTRACTOR SHALL CONSIDER THAT EVERY LOCKING DEVICES SHALL BE EQUAL OR SIMILAR TO EXISTING.

9. CONTRACTOR SHALL VERIFY THAT DOORS AND WINDOWS PROPERLY OPERATES (CLOSE, OPEN PROPERLY) INCLUDING ALL LOCKING DEVICES, AFTER WEATHERSTRIP AND LOCKING DEVICES INSTALLATIONS.

10. CONTRACTOR SHALL VISIT THE BUILDING TO GET FAMILIARIZED WITH THE ENTIRE SCOPE OF WORK.

11. FOR LOCKING DEVICES QUANTITIES OF EACH DOORS & WINDOWS REFER TO SHEETS a-2.0a & A-2.0b.

ENGINEERED ADVANTAGE, PSC
P.O. BOX 6025
San Juan, Puerto Rico 00914
p. 787-756-6032 email:pjvagnetti@eapsc.net

PROJECT
CONSTRUCTION FOR
HAZARD MITIGATION FOR STATE DEPARTMENT BUILDING

ADDRESS
SAN JOSE STREET
SAN JUAN, PUERTO RICO

OWNER:

SEAL:

DRAWN BY:	D. LUGO
REVIEWED BY:	P. J. VAGNETTI
DATE:	2021-09-09
PROJECT NO:	20-726

NO.	REVISION	DATE.

SHEET TITLE:

WINDOWS & DOORS LOCKING DEVICES DETAILS

PAGE NUMBER

A-2.12